BAOSTEEL | 创享改变生活

热轧酸洗产品手册

Manual of Hot-rolled Pickled Products

www.ibaosteel.com

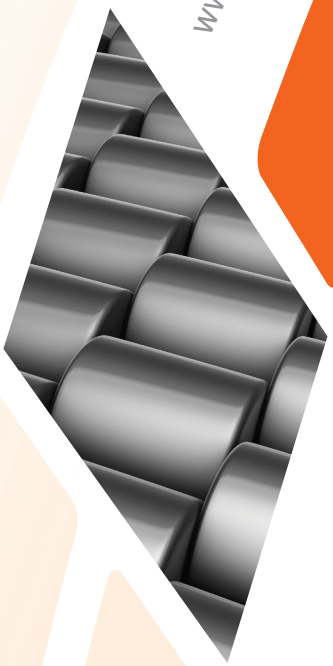

宝山钢铁股份有限公司
BAOSHAN IRON & STEEL CO., LTD.

Contents

目 录

前言 ····· 02
Preface

酸洗产品生产流程 ····· 03
Production FlowChat of Pickled Products

热轧酸洗机组简介 ····· 04
Introduction of Hot-rolled Pickling Line

产品特点 ····· 05
Feature of Products

产品介绍 ····· 06
Introduction of Products

新品种 ····· 25
New Products

包装及标签 ····· 33
Packaging & Labeling

订货指南 ····· 34
Order Guide

Preface

前 言

热轧酸洗产品以其表面质量、节省工序能耗等独特优势，越来越多地被应用在汽车制造、家电等行业，成为汽车底盘、车轮、座椅、安全构件、压缩机、热水器等的主要材料。宝钢以满足用户需求为导向，紧密跟踪汽车、家电等行业发展动态，凭借长期积累的生产技术，进行热轧酸洗产品的探索和实践，生产出具有良好品质的系列化产品，并实现了批量稳定供货，满足安全性和经济性的要求，在国内外知名厂家批量使用，受到用户的青睐。

宝钢拥有强大的酸洗用钢材料研发及使用技术研究实力，可与用户开展全方位技术合作，指导用户选材，解决使用中存在的问题，为用户提供材料使用全流程的一揽子技术解决方案，为用户批量稳定生产提供支持，为用户实现增值服务。

宝钢在产品实现过程中始终关注用户绿色需求，与用户分享先进的环境设计理念和技术，向社会提供环境绩效优良的产品和服务，并发布了基于生命周期评价的产品环境声明。

Hot rolled pickled products, with their unique advantages such as surface quality and energy-saving processes, are increasingly being applied in industries such as automotive manufacturing and home appliances, becoming the main materials for automotive chassis, wheels, seats, safety components, compressors, water heaters, etc. Baosteel is guided by meeting user needs and closely follows the development trends of industries such as automobiles and home appliances. With long-term accumulation of production technology, Baosteel explores and practices hot-rolled and pickled products, producing series products with good quality and achieving stable supply in batches, meeting safety and economic requirements. Baosteel has been widely used by well-known manufacturers both domestically and internationally, and is favored by users.

Baosteel has strong capabilities in the research and development of hot rolled pickled products, as well as the research and application technology. It can conduct comprehensive technical cooperation with users, guide them in material selection, solve problems in use, provide users with a comprehensive technical solution for the entire process of material use, provide support for batch stable production, and achieve value-added services for users.

Baosteel always pays attention to the green needs of users in the product implementation process, shares advanced environmental design concepts and technologies with users, provides products and services with excellent environmental performance to society, and issues a product environmental statement based on life cycle assessment.

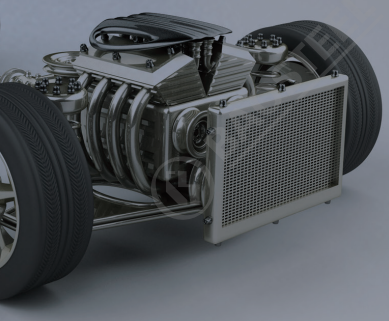

酸洗产品生产流程

Production Flow Chat of Pickled Products

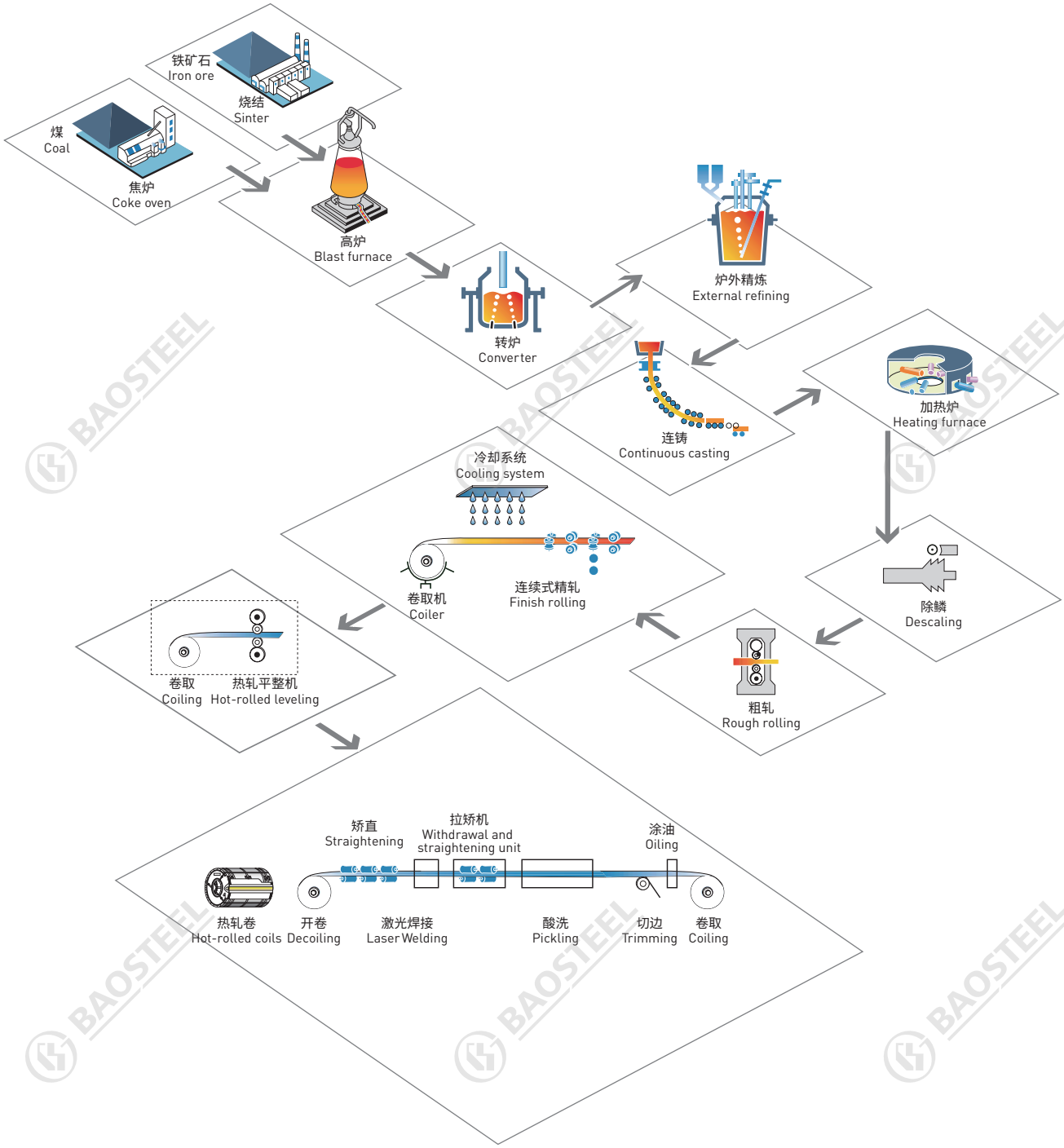

热轧酸洗机组简介

Introduction of Hot-rolled Pickling Line

宝钢目前有 5 条热轧酸洗机组，其中 4 条为连续酸洗机组，1 条为推拉式酸洗机组，总设计产能为 415 万吨。

Baosteel currently has 5 hot rolling pickling lines, including 4 continuous pickling lines and 1 push-pull pickling line, with a total design capacity of 4.15 million tons.

项 目 Projects	宝山 1 Baoshan 1	青山 1 Qingshan 1	东山 1 Dongshan 1	梅山 1 Meishan 1	梅山 2 Meishan 2
生产强度等级 Strength grade	≤ 980Mpa	≤ 980Mpa	≤ 980Mpa	≤ 980Mpa	≤ 1200Mpa
厚度 Thickness	1.5-6.0mm	1.5-6.0mm	1.5-8.0mm	1.5-8.0mm	2-12.7mm
宽度 Width	800-1630mm	900-1500mm	800-1630mm	800-1630mm	800-1630mm
机组形式 Unit form	单开、单卷 Single open/roll	单开、双卷 Single open/Double roll	双开、双卷 Double open/roll	双开、双卷 Double open/roll	单开、单卷 Single open/roll
工艺段最大速度 Max speed	140m/s	160m/s	180m/s	160m/s	80m/s
酸洗形式 Pickling form	浅槽紊流式酸洗（连续式） Shallow slot turbulent pickling (Continuous)	浅槽紊流式酸洗（连续式） Shallow slot turbulent pickling (Continuous)	浅槽紊流式酸洗（连续式） Shallow slot turbulent pickling (Continuous)	浅槽紊流式酸洗（连续式） Shallow slot turbulent pickling (Continuous)	浅槽紊流式酸洗（推拉式） Shallow slot turbulent pickling (Push-pull)
拉矫机 Stretch rolling	45t	45t	65t	45t	-
设计产能 Designed Capacity	75 万吨 0.75 million tons	80 万吨 0.8 million tons	100 万吨 1 million tons	100 万吨 1 million tons	60 万吨 0.6 million tons
投产时间 Year of operation	2001 年 1 月 Jan, 2001	2021 年 7 月 Jul, 2021	2016 年 3 月 Mar, 2016	2011 年 7 月 Jul, 2011	2021 年 7 月 Jul, 2021

产品特点
Feature of Products

1 用盐酸将热轧钢板上的氧化铁皮清除后得到漂亮、光滑的表面，便于焊接、涂油和上漆

Smooth surface is obtained by using hydrochloric acid to remove the scale on the hot-rolled strips, thus makes it easier for welding, oiling and painting.

2 切除不规则的头尾、按产品宽度切除热轧带钢的边部，以利于后序加工

In order to facilitate the processes followed, irregular heads and tails are removed and the edges of the hot rolled strips are trimmed according to the width of the products.

3 检查并清除钢板表面不利于后道工序的缺陷

Surface defects on the sheets which are not conducive to the processes followed are examined and eliminated.

4 对带钢表面涂油，以防钢卷在存放期间发生锈蚀

The strip surface is oiled to prevent it from rusting during storage.

5 尺寸精度高，经拉矫、平整后可改善带钢板形

High precision in sizes, the strip shape can be improved by straightening, leveling and temper rolling.

产品介绍
Introduction of Products

常规标准及牌号 General Standards and Grades

	宝钢企业标准 Baosteel standards		相当国际标准 Euqal International standards		用途 Uses
	标准号 Standard number	牌号 Steel grade	标准号 Standard number	牌号 Steel grade	
冷成型用钢 Steel for cold forming	Q/BQB 302-2023	SPHC SPHD SPHE SPHF BRC1 BRC2 BRC3	JIS G3131	SPHC SPHD SPHE SPHF SPHF SPHF SPHF	用于制造冷成型加工的零件 For cold forming parts
		DD11 DD12 DD13 DD14	EN 10111	DD11 DD12 DD13 DD14	
一般结构用钢 General structural steel	Q/BQB 303-2023	SS330 SS400 S490 SS540	JIS G3101	SS330 SS400 SS490 SS540	用于车辆一般结构件 For general automotive structural parts
		S185 S235JR（St37-2） S235J0 S235J2 S275JR（St44-2） S275J0 S275J2 S355JR S355J0（St52-3） S355J2 S355K2	EN 10025	S185 S235JR S235J0 S235J2 S275JR S275J0 S275J2 S355JR S355J0 S355J2 S355K2	
		SM400A SM400B SM400C SM490A SM490B SM490C SM490YA SM490YB SM520B SM520C SM570、BSM590 B590GJA、B590GJB B520JJ B750GJ	JIS G3106	SM400A SM400B SM400C SM490A SM490B SM490C SM490YA SM490YB SM520B SM520C SM570 — — —	用于焊接结构件 For welded structural parts

	宝钢企业标准 Baosteel standards		相当国际标准 Euqal International standards		用途 Uses
	标准号 Standard number	牌号 Steel grade	标准号 Standard number	牌号 Steel grade	
一般结构用钢 General structural steel	Q/BQB 303-2023	StE255 StE285 StE355	DIN 17102	StE255 TStE285 StE355	用于焊接结构件 For welded structural parts
		SPHT1 SPHT2 SPHT3 SPHT4	JIS G3132	SPHT1 SPHT2 SPHT3 SPHT4	用于焊接钢管 For welded tube
汽车桥壳用钢 Steel for automobile axle housings	Q/BQB 304-2023	B440QK B510QK B550QK B600QK	—	—	供制造冷成形汽车桥壳用 For manufacturing cold forming automotive axle housings
		B440HQK B510HQK B550HQK B600HQK B1000HQK	—	—	供制造热成形汽车桥壳用 For manufacturing hot-forming automotive axle housings
汽车车轮用钢 Steel for automobile wheel	Q/BQB 305-2023	B330CL B380CL B420CL B450CL B500CL B530CL B550CL B600CL B650CL	—	—	用于制造汽车滚型车轮轮辋及轮辐 For manufacturing automobile roller rims and spokes
汽车大梁用钢 Steel for automobile frame	Q/BQB 306-2023	B320L B420L B440L B510L B510DL B550L B590L B610L（B600L） B650L B700L B750L	—	—	供制造汽车大梁、横梁用 For manufacturing automobile frames and crossbeams
		BST700L BST750L	—	—	供制造半挂车纵梁、横梁用 For manufacturing semi-trailer longitudinal beams and crossbeams

	宝钢企业标准 Baosteel standards		相当国际标准 Euqal International standards		用途 Uses
	标准号 Standard number	牌号 Steel grade	标准号 Standard number	牌号 Steel grade	
TL1406 系列汽车结构用钢 TL1406 Series for automobile structural steel	Q/BQB 307-2023	TL1106 TL1110 TL1111	—	—	可用于良好成形性能的汽车结构件，如副车架等 Automotive structural components with good formability, such as subframes, etc
		TL1402 TL1406 410XLF	—	—	可用于良好成形性能的汽车结构件，如车轮、大梁横梁等 Automotive structural components with good formability, such as wheels, crossbeams, etc
搪瓷用高强度钢 High strength steel for porcelain enameling	Q/BQB 308-2023	BTC210R BTC245R BTC330R (BTC340R) BTC360R	—	—	用于以干粉和湿法搪瓷工艺进行搪瓷制造热水器内胆等 Dry powder and wet method for porcelain nameling are rused for manufacturing inner container of water heater, etc.
汽车结构用钢 Steel for automobile structural use	Q/BQB 310-2023	SAPH310 SAPH370 SAPH400 SAPH440 SPFH540 SPFH590 SPFH780	JIS G3113 JIS G3134	SAPH310 SAPH370 SAPH400 SAPH440 SPFH540 SPFH590 SPFH780	用于要求成形性加工性能的汽车构件、车轮等汽车结构件 For automotive structural parts such as wheels which equire formability and processability
		QStE340TM QStE380TM QStE420TM QStE460TM QStE500TM QStE550TM QStE600TM QStE650TM QStE700TM	SEW 092 (EN10149-2)	QStE340TM(S355MC) QStE380TM(-) QStE420TM(S420MC) QStE460TM(S460MC) QStE500TM(S500MC) QStE550TM(S550MC) QStE600TM(S600MC) QStE650TM(S650MC) QStE690TM(S700MC)	用于要求良好冷成型性能并有较高或高强度要求的汽车大梁、方管和圆管等结构件 For cold forming used for automotive structural parts such as automobile frames, tubes and pipes，which requires excellent cold forming performance and high or higher strength requirements
冷成形用高屈服强度钢 High yield strength steel for cold forming	Q/BQB 311-2023	S315MC S355MC S420MC S460MC S500MC S550MC S600MC S650MC S700MC	EN10149-2	S315MC S355MC S420MC S460MC S500MC S550MC S600MC S650MC S700MC	冷成形用高强度结构件 High strength structural parts for cold forming

	宝钢企业标准 Baosteel standards		相当国际标准 Euqal International standards		用途 Uses
	标准号 Standard number	牌号 Steel grade	标准号 Standard number	牌号 Steel grade	
冷成形用先进高强度钢 Advanced high strength steel sheet and strip for cold forming	Q/BQB 312-2023	BR330/580DP、DP600 BR450/780DP BR400/590TR BR450/780TR BR300/450HE BR440/590HE (BR440/580HE) FB590 BR600/780HE BR780/980HE FB780 BR900/1200MS BR660/760CP、CP800 BR720/950CP	EN 10338/ VDA239-100	HDT580X/HDT580X — — — HDT450F/HR300Y450T-FB HDT580F/HR440Y580T-FB — HR600Y780T-FB — — HDT1180G1/HR900Y1180T-MS HDT760C/HR660Y760T-CP —	用于制作结构件、加强件等 Used for manufacturing the structural parts, reinforced parts, etc
		SAPH440SF SAPH540SF SAPH590SF SAPH780SF	JFS A 1001	JSH440B JSH540B JSH590B —	
热冲压用钢 Steel for hot-stamping press hardening	Q/BQB 315-2023	BR1200HS BR1500HS	DIN EN ISO 683-2/ EN 10083-3	20MnB5 22MnB5	用于A柱、B柱、前后保险杠、车门防撞杆等安全结构件 Used for safety structural components such as A-pillars, B-pillars, front and rear bumpers, door crash bars, etc
耐热结构用钢 Steel for heat resisting structure	Q/BQB 351-2023	12Cr1MoV 15CrMo	—	—	耐热结构件。不能用于中温、或高温、或腐蚀的结构件，也不能用作锅炉及压力容器 Heat resistant structural components. It cannot be used for medium temperature, high temperature, or corrosive structural components, nor can it be used for boilers and pressure vessels

	宝钢企业标准 Baosteel standards		相当国际标准 Euqal International standards		用途 Uses
	标准号 Standard number	牌号 Steel grade	标准号 Standard number	牌号 Steel grade	
特殊钢 Special steel	Q/BQB 360-2023	碳素钢 Carbon steel 30、35、45、50、 BJS15C、BJS20C、 BJS55C、C10、C15、 S10C、S15C、S20C、 S35C、S45C、S50C、 S55C、SK85(SK5)、 SK95(SK4)、SAE1018、 SAE1020、SAE1022、 SAE1035、SAE1045、 SAE1050、SAE1055、 SAE1065、SAE1070、 SAE1078、C67S、C75S、 C60E、40Mn、45Mn、 65Mn	EN 10083 EN 10083-3 EN 10084 EN 10089 EN 10132 EN 10132-4 EN ISO 683-1 EN ISO 683-2 EN ISO 683-3 JIS G4051 JIS G4053 JIS G4401 JIS G4801 SAE J1268 SAE J403 SAE J404	—	用于经切削等 加工并热处理后使用的 机械结构件 For machine structural parts processed by cutting and heat treatment
	Q/BQB 360-2023	合金钢 Alloy steel 15Cr、20Cr、40Cr、 15CrMo、20CrMo、 30CrMo、35CrMo、 34CrMo4、42CrMo4、 SNCM220、SCM415、 SCM43520MnB5、 22MnB5、26MnB5、 38MnB5、27MnCrB5-2、 40MnB、16MnCr5、 20CrMnTi、SAE5120H、 40CrMn、50Mn2V、 65Mn-Cr、75Cr1、 50CrV(50CrVA)、 51CrV4(50CrV4)、 80CrV2(8CrV)、SUP6、 SUP10、60Si2MnA、 30CrSiMoVA		—	
连续油管用钢 Steel for coiled tubing	Q/BQB 374-2023	CT70 CT80 CT90 CT100 CT110 CT130	API Spec 5ST	CT70 CT80 CT90 CT100 CT110 —	供生产连续油管用 For the production of coiled tubing

冷成型用热轧酸洗钢带

Hot-rolled Pickled Strip For Cold Forming

化学成分 Chemical Composition

牌号 Steel grade	化学成分[a、b]（质量分数） % Chemical composition[a、b] (Mass fraction) %							
	C	Si	Mn	P	S	Alt	Ti	N
DD11	≤ 0.12	≤ 0.05	≤ 0.60	≤ 0.030	≤ 0.030	≥ 0.010	—	—
DD12	≤ 0.10	≤ 0.05	≤ 0.45	≤ 0.025	≤ 0.020	≥ 0.010	—	—
DD13	≤ 0.08	≤ 0.05	≤ 0.40	≤ 0.025	≤ 0.020	≥ 0.010	—	—
DD14	≤ 0.08	≤ 0.05	≤ 0.35	≤ 0.025	≤ 0.020	≥ 0.010	—	—
SPHC	≤ 0.12	≤ 0.05	≤ 0.60	≤ 0.030	≤ 0.030	≥ 0.010	—	—
SPHD[c]	≤ 0.10	≤ 0.05	≤ 0.45	≤ 0.025	≤ 0.020	≥ 0.010	—	—
SPHE	≤ 0.08	≤ 0.05	≤ 0.40	≤ 0.025	≤ 0.020	≥ 0.010	—	—
SPHF	≤ 0.08	≤ 0.05	≤ 0.35	≤ 0.025	≤ 0.020	≥ 0.010	—	—
BRC1	≤ 0.08	≤ 0.05	≤ 0.40	≤ 0.025	≤ 0.020	≥ 0.010	—	—
BRC2	≤ 0.05	≤ 0.05	≤ 0.40	≤ 0.025	≤ 0.020	≥ 0.010	—	—
BRC3	≤ 0.03	≤ 0.05	≤ 0.30	≤ 0.025	≤ 0.020	≥ 0.010	—	—
IFHR1	≤ 0.008	≤ 0.04	≤ 0.30	≤ 0.020	≤ 0.020	≥ 0.010	≤ 0.08	≤ 0.005
IFHR2	≤ 0.005	≤ 0.03	≤ 0.30	≤ 0.020	≤ 0.020	≥ 0.010	≤ 0.08	≤ 0.004
IFHR3	≤ 0.003	≤ 0.03	≤ 0.20	≤ 0.020	≤ 0.020	≥ 0.010	≤ 0.08	≤ 0.004

[a] 由供方选择，可添加特殊元素。
Selected by the manufacturer, other alloy elements may be added.

[b] 钢中残余元素含量 Cu ≤ 0.20% ,Cr ≤ 0.15%，Ni ≤ 0.15%。但在供方能保证时，可不进行这些元素的化学分析。
The residual element content in steel is Cu ≤ 0.20%, Cr ≤ 0.15%, and Ni ≤ 0.15%. However,chemical analysis of these elements may be exempted if the manufacturer can guarantee to meet above requirements.

[c] 当厚度 t>14mm，Mn 含量上限可提高到 0.50%。
When thickness more than 14mm, the upper limit content of Mn may be increased to 0.50%.

机械性能 Mechanical Properties

牌号 Steel grade	拉伸试验[a] Tensile Test[a]							性能保证期 validity period of mechanical properties
	下列厚度 (mm) 时下屈服强度[b] R_{el}/MPa Yield Strength[b] for following thickness(mm) R_{el}/MPa		抗拉强度 R_m/MPa Tensile strength R_m/MPa	下列厚度 (mm) 时的断后伸长率% Elongation after fracture[d] for following thickness(mm)%, Min				
				L_0=80mm，b=20mm			$L_0=5.65\sqrt{S_0}$	
	<2.0	2.0~12.0		<1.5	1.5~ <2.0	2.0~<3.0	3.0~12.0	
DD11	170~360	170~340	≤ 440	≥ 22	≥ 23	≥ 24	≥ 28	3 月 (3 month)
DD12	170~340	170~320	≤ 420	≥ 24	≥ 25	≥ 26	≥ 30	6 月 (6 month)
DD13	170~330	170~310	≤ 400	≥ 27	≥ 28	≥ 29	≥ 33	6 月 (6 month)
DD14	170~310	170~290	≤ 380	≥ 30	≥ 31	≥ 32	≥ 36	6 月 (6 month)

[a] 拉伸试验取纵向试样。
The test pieces of the tensile tests shall be taken parallel to the direction of rolling.

[b] 屈服现象不明显时，采用 $R_{p0.2}$。
$R_{p0.2}$shall be used if the product does not exhibit any yield phenomenon.

机械性能 Mechanical Properties

牌号 Steel grade	拉伸试验[a,b] Tensile Test[a,b]							180°弯曲试验[a,c] 180° Bend test[a,c]		性能保证期 validity period of mechanical properties
	抗拉强度[d] R_m/MPa Tensile strength[d] R_m/MPa	下列厚度 (mm) 时的断后伸长率 % Elongation after fracture[d] for following thickness(mm)%, Min						下列厚度 (mm) 时 D- 弯曲压头直径 a- 试样厚度 D- Former diameter a-Specimen thickness for followingthickness (mm)		
		<1.6	1.6~<2.0	2.0~ <2.5	2.5~ <3.2	3.2~ <4.0	⩾ 4.0	<3.2	⩾ 3.2	
SPHC	⩾ 270	⩾ 27	⩽ 29	⩾ 29	⩾ 29	⩾ 31	⩾ 31	D=0a	D=1a	3 月 (3 month)
SPHD	⩾ 270	⩾ 30	⩽ 32	⩾ 33	⩾ 35	⩾ 37	⩾ 39	—	—	6 月 (6 month)
SPHE	⩾ 270	⩾ 32	⩽ 34	⩾ 35	⩾ 37	⩾ 39	⩾ 41	—	—	6 月 (6 month)
SPHF	⩾ 270	⩾ 37	⩽ 38	⩾ 39	⩾ 39	⩾ 40	⩾ 42	—	—	6 月 (6 month)

[a] 试验取纵向试样。
The test pieces shall be taken parallel to the direction of rolling.

[b] 拉伸试验采用 L_0=50mm，b=25m 的试样，即为 GB/T228.1—2021 中 P17 试样。
The tensile test piece takes a specimen of L_0=50mm, b=25mm, which is No.P17 specified in GB/T 228.1-2021.

[c] 弯曲试样宽度 b ⩾ 20mm，仲裁试验时 b=20mm。
The width of the bend test piece b ⩾ 20mm, and b=20mm during the arbitration test.

[d] 根据需方要求，经供需双方协商并在合同中规定，可规定各牌号的抗拉强度上限 :SPHC 为 440MPa，SPHD 为 420MPa SPHE 为 400MPa，SPHF 为 380MPa。
The following may be applied as the upper limit of tensile strength as agreed between the purchaser and the manufacture. SPHC: 440MPa for, SPHD: 420MPa, SPHE:400MPa, SPHF:380MPa.

牌号 Steel grade	拉伸试验[a,b] Tensile Test[a,b]							性能保证期 validity period of mechanical properties
	抗拉强度[d] R_m/MPa Tensile strength[d] R_m/MPa	下列公称厚度 (mm) 时的断后伸长率 % Elongation after fracture[d] for following thickness(mm)%,Min						
		1.5~<1.6	1.6~<2.0	2.0~<2.5	2.5~<3.2	3.2~<4.0	4.0~8.0	
BRC1	⩾ 275	⩾ 33	⩾ 35	⩾ 37	⩾ 39	⩾ 41	⩾ 42	6 月 (6 month)
BRC2	⩾ 255	—	⩾ 37	⩾ 39	⩾ 41	⩾ 43	⩾ 44	6 月 (6 month)
BRC3	⩾ 255	—	⩾ 39	⩾ 41	⩾ 43	⩾ 45	⩾ 46	6 月 (6 month)

[a] 拉伸试验取纵向试样。
The test pieces of the tensile tests shall be taken parallel to the direction of rolling.

[b] 拉伸试验采用 L_0=50mm，b=25mm 的试样，即为 GB/T228.1—2021 中 P17 试样。
The tensile test piece takes a specimen of L_0=50mm, b=25mm, which is No.P17 specified in GB/T 228.1-2021.

一般结构用热轧酸洗钢带

Hot-rolled Pickled Strip For General Structural

化学成分 Chemical Composition

牌号 Steel grade	化学成分[a]（质量分数）% Chemical composition[a](Mass fraction) %						
	C	Si	Mn	P	S	N[b]	Ceq[c]
SS330	≤ 0.15	≤ 0.30	≤ 0.95	≤ 0.025	≤ 0.020	—	—
SS400	≤ 0.21	≤ 0.30	≤ 1.40	≤ 0.025	≤ 0.020	—	—
SS490	≤ 0.22	≤ 0.25	≤ 1.40	≤ 0.025	≤ 0.020	—	—
SS540	≤ 0.30	≤ 0.25	≤ 1.60	≤ 0.025	≤ 0.020	—	—
S185	—	—	—	≤ 0.030	≤ 0.030	—	—
S235JR, St37-2	≤ 0.17	≤ 0.35	≤ 1.40	≤ 0.025	≤ 0.020	≤ 0.012	≤ 0.035
S235J0	≤ 0.17	≤ 0.35	≤ 1.40	≤ 0.025	≤ 0.020	≤ 0.012	≤ 0.035
S235J2	≤ 0.17	≤ 0.35	≤ 1.40	≤ 0.025	≤ 0.020	-	≤ 0.035
S275JR, St44-2	≤ 0.21	≤ 0.35	≤ 1.50	≤ 0.025	≤ 0.020	≤ 0.012	≤ 0.40
S275J0	≤ 0.18	≤ 0.35	≤ 1.50	≤ 0.025	≤ 0.020	≤ 0.012	≤ 0.40
S275J2	≤ 0.18	≤ 0.35	≤ 1.50	≤ 0.025	≤ 0.020	-	≤ 0.40
E295	≤ 0.30	≤ 0.35	≤ 1.60	≤ 0.030	≤ 0.030	≤ 0.012	-
S355JR	≤ 0.24	≤ 0.55	≤ 1.60	≤ 0.025	≤ 0.020	≤ 0.012	≤ 0.45
S355J0, St52-3	≤ 0.20	≤ 0.55	≤ 1.60	≤ 0.025	≤ 0.020	≤ 0.012	≤ 0.45
S355J2	≤ 0.20	≤ 0.55	≤ 1.60	≤ 0.025	≤ 0.020	—	≤ 0.45
S355K2	≤ 0.20	≤ 0.55	≤ 1.60	≤ 0.025	≤ 0.020	—	≤ 0.45

[a] 根据需要可添加其他合金元素。
Other alloy elements may be added if necessary.

[c] $Ceq=C+\frac{Mn}{6}+\frac{Cr+Mo+V}{5}+\frac{Ni+Cu}{15}$

[b] 当 Alt ≥ 0.020 或 Als ≥ 0.015 或加入其他足够固氮元素时，氮最大值不适用，检验文件中应提供固氮元素含量。
The maximum value of content Nitrogen is not applicable, if Alt ≥ 0.020 or Als ≥ 0.015, or other Nitrogen fixing elements are added, in this case, the content of Nitrogen fixing elements shall be provided in the inspection documents.

牌号 Steel grade	化学成分[a]（质量分数）% Chemical composition[a] (Mass fraction) (heat analysis) %					
	C	Si	Mn	P	S	其他[a]
SM400A	≤ 0.23	≤ 0.35	≥ 2.5×C[d]	≤ 0.025	≤ 0.020	—
SM400B	≤ 0.20	≤ 0.35	0.60~1.50	≤ 0.025	≤ 0.020	—
SM400C	≤ 0.18	≤ 0.35	0.60~1.50	≤ 0.025	≤ 0.020	—
SM490A	≤ 0.20	≤ 0.55	≤ 1.65	≤ 0.025	≤ 0.020	Ceq[b] ≤ 0.38
SM490B、SM490C	≤ 0.18	≤ 0.55	≤ 1.65	≤ 0.025	≤ 0.020	Ceq[b] ≤ 0.38
SM490YA、SM490YB	≤ 0.20	≤ 0.55	≤ 1.65	≤ 0.025	≤ 0.020	Ceq[b] ≤ 0.38
SM520B、SM520C	≤ 0.20	≤ 0.55	≤ 1.65	≤ 0.025	≤ 0.020	Ceq[b] ≤ 0.40
SM570	≤ 0.18	≤ 0.55	≤ 1.70	≤ 0.025	≤ 0.020	Ceq[b] ≤ 0.44
BSM590	≤ 0.16	≤ 0.55	≤ 2.00	≤ 0.025	≤ 0.020	Ceq[b] ≤ 0.45
B590GJA、B590GJB	≤ 0.15	≤ 0.55	≤ 1.60	≤ 0.025	≤ 0.020	Nb+V ≤ 0.15 Nb+V ≤ 0.50
B520JJ	≤ 0.20	≤ 0.55	≤ 1.60	≤ 0.025	≤ 0.020	Cu:0.20~0.45
B750GJ	≤ 0.20	≤ 0.55	≤ 1.80	≤ 0.025	≤ 0.020	Cr ≤ 0.50、Mo ≤ 0.50、 Nb+V+Ti ≤ 0.22
StE255	≤ 0.18	≤ 0.40	0.50~1.30	≤ 0.025	≤ 0.020	Alt[c] ≥ 0.020 N ≤ 0.015 Nb+V+Ti ≤ 0.22
StE285	≤ 0.18	≤ 0.40	0.50~1.50			
StE355	≤ 0.20	≤ 0.50	0.90~1.65			

[a] 根据需要可添加其他合金元素。
Other alloy elements may be added if necessary.

[b] $Ceq=C+\frac{Mn}{6}+\frac{Si}{24}+\frac{Ni}{40}+\frac{Cr}{5}+\frac{Mo}{4}+\frac{V}{14}$

[c] 如有其他足够的固氮元素，Alt 最小规定量不适用。
If other Nitrogen fixing elements are fully added, the minimum value of Alt is not applicable.

[d] 成分采用实际熔炼分析值。
The Carbon content adopts the actual value of heat analysis.

化学成分 Chemical Composition

牌号 Steel grade	化学成分[a]（质量分数） % Chemical composition[a](Mass fraction) %					
	C	Si	Mn	P	S	其他[a]
SPHT1	≤ 0.10	≤ 0.35	≤ 0.50	≤ 0.025	≤ 0.020	—
SPHT2	≤ 0.18	≤ 0.35	≤ 0.60	≤ 0.025	≤ 0.020	—
SPHT3	≤ 0.25	≤ 0.35	0.30~0.90	≤ 0.025	≤ 0.020	—
SPHT4	≤ 0.30	≤ 0.35	0.30~1.00	≤ 0.025	≤ 0.020	—

[a] 根据需要可添加其他合金元素。
Other alloy elements may be added if necessary.

机械性能 Mechanical Properties

牌号 Steel grade	拉伸试验[a] Tensile Test[a]						180°弯曲试验[b] D- 弯曲压头直径 a 试样厚度 180° Bend test[b] D-Former diameter a-Specimen thickness	V 型冲击试验[c] Impact test[c]	
	上屈服强度 R_{eH} / MPa Yield strength R_{eH} MPa		抗拉强度 R_m / MPa Tensile strength[d] R_m/MPa	断后伸长率 % Elongation after fracture %				温度 °C Test temperature °C	冲击吸收能量 KV_2, J Impact absorption energy KV_2, J
				L_0=50mm[d], b=25mm		L_0=200mm[d], b=40mm			
	公称厚度 mm Nominal thickness mm			公称厚度 mm Nominal thickness mm					
	≤ 16	>16		≤ 5	>5~16	>16			
SS330	≥ 205	≥ 195	330~430	≥ 26	≥ 21	≥ 26	D=1a	—	—
SS400	≥ 245	≥ 235	400~510	≥ 21	≥ 17	≥ 21	D=3a	—	—
SS490	≥ 285	≥ 275	490~610	≥ 19	≥ 15	≥ 19	D=4a	—	—
SS540	≥ 400	≥ 390	≥ 540	≥ 16	≥ 13	≥ 17	D=4a	—	—
SM400A	≥ 245	≥ 235	400~510	≥ 23	≥ 18	≥ 22	D=2a	—	—
SM400B	≥ 245	≥ 235	400~510	≥ 23	≥ 18	≥ 22	D=2a	0	≥ 27
SM400C	≥ 245	≥ 235	400~510	≥ 23	≥ 18	≥ 22	D=2a	0	≥ 47
SM490A	≥ 325	≥ 315	490~610	≥ 22	≥ 17	≥ 21	D=3a	-	-
SM490B	≥ 325	≥ 315	490~610	≥ 22	≥ 17	≥ 21	D=3a	0	≥ 27
SM490C	≥ 325	≥ 315	490~610	≥ 22	≥ 17	≥ 21	D=3a	0	≥ 47
SM490YA	≥ 365	≥ 355	490~610	≥ 19	≥ 15	≥ 19	D=3a	-	-
SM490YB	≥ 365	≥ 355	490~610	≥ 19	≥ 15	≥ 19	D=3a	0	≥ 27
SM520B	≥ 365	≥ 355	520~640	≥ 19	≥ 15	≥ 19	D=3a	0	≥ 27
SM520C	≥ 365	≥ 355	520~640	≥ 19	≥ 15	≥ 19	D=3a	0	≥ 27
SM570	≥ 460	-	570~720	≥ 19[d]	≥ 19[d]	—	D=3a	-5	≥ 47
BSM590	≥ 450	-	590~710	≥ 20[d]	≥ 20[d]	—	D=2a	-5	≥ 47

[a] 拉伸试验取横向试样。屈服现象不明显时，采用 $R_{p0.2}$。
The test pieces of the tensile test shall be taken perpendicular to the direction of rolling. $R_{p0.2}$ shall be used if the product does not exhibit any yield phenomenon.

[b] 弯曲试验取横向试样。弯曲试样宽度 b ≥ 20mm，仲裁试验时 b=20mm。
The test pieces of the bend test shall be taken perpendicular to the direction of rolling. The width of the bend test piece b ≥ 20mm, and b=20mm during the arbitration test.

[c] 冲击试验取纵向试样。
The test pieces of the impact test shall be taken parallel to the direction of rolling.

[d] 拉伸试样 L_0=50mm，b=25mm，为 GB/T228.1-2021 中 P17 试样。
The tensile test piece takes a specimen of L_0=50mm, b=25mm, which is No.P17 specified in GB/T 228.1-2021.

机械性能 Mechanical Properties

牌号 Steel grade	拉伸试验[a] Tensile Test[a]					180°弯曲试验[b] D-弯曲压头直径 a-试样厚度 180° Bend test[b] D-Former diameter a-Specimen thickness	
	抗拉强度 R_m/MPa Tensile strength[d] R_m/MPa	断后伸长率 % Elongation after fracture %					
		公称厚度 mm Nominal thickness mm				公称厚度 mm Nominal thickness mm	
		<1.6	1.6~<3.0	3.0~<6.0	6.0~ ⩽ 13.0	⩽ 3.0	>3.0
SPHT1	⩾ 270	⩾ 30	⩾ 32	⩾ 35	⩾ 37	D=0a	D=1a
SPHT2	⩾ 340	⩾ 25	⩾ 27	⩾ 30	⩾ 32	D=2a	D=3a
SPHT3	⩾ 410	⩾ 20	⩾ 22	⩾ 25	⩾ 27	D=3a	D=4a
SPHT4	⩾ 490	⩾ 15	⩾ 18	⩾ 20	⩾ 22	D=3a	D=4a

[a] 拉伸试验取纵向试样。拉伸试样应采用 L_0=50mm，b=25mm，即为 GB/T228.1-2021 中 P17 试样。
The test pieces of the tensile test shall be taken The test pieces of the tensile test shall be taken parallel to the direction of rolling. The tensile test piece takes a specimen of L_0=50mm, b=25mm, which is No.P17 specified in GB/T 228.1-2021.

[b] 弯曲试验取纵向试样。弯曲试样宽度 b ⩾ 20mm，仲裁试验时 b=20mm。
The test pieces of the bend test shall be taken parallel to the direction of rolling. The width of the bend test piece b ⩾ 20mm, and b=20mm during the arbitration test.

牌号 Steel grade	拉伸试验[a] Tensile Test[a]								180°弯曲试验[b] D-弯曲压头直径 a 试样厚度 180° Bend test[b] D-Former diameter a-Specimen thickness		V 型冲击试验[c] Impact test[c]	
	上屈服强度 R_{eH}/ MPa Yield strength R_{eH} MPa		抗拉强度[d] R_m/MPa Tensile strength[d] R_m/MPa		断后伸长率 % Elongation after fracture %						试验温度 °C Test temperature °C	冲击吸收能量 KV_2, J Impact absorption energy KV_2, J
					L_0=80mm，b=20mm			$L_0=5.56\sqrt{S_0}$				
	公称厚度 mm Nominal thickness mm											
	⩽ 16.0	>16.0	<3.0	⩾ 3.0	>1.5~2.0	>2.0~2.5	>2.5~3.0	⩾ 3.0	<3.0	⩾ 3.0		
S185	⩾ 185	⩾ 175	310~540	290~510	⩾ 10	⩾ 11	⩾ 12	⩾ 16	D=3a	D=3.5a	—	—
S235JR[d] St37-2[d]	⩾ 235	⩾ 225	360~510	360~510	⩾ 17	⩾ 18	⩾ 19	⩾ 24	D=1.5a	D=2a	⩾ 27	⩾ 27
S235J0	⩾ 235	⩾ 225	360~510	360~510	⩾ 17	⩾ 18	⩾ 19	⩾ 24	D=1.5a	D=1.5a	⩾ 27	⩾ 27
S235J2	⩾ 235	⩾ 225	360~510	360~510	⩾ 17	⩾ 18	⩾ 19	⩾ 24	D=1a	D=3a	-20	⩾ 27
S275JR[d] St44-2[d]	⩾ 275	⩾ 265	430~580	410~560	⩾ 15	⩾ 16	⩾ 17	⩾ 21	D=2.5a	D=3a	+20	⩾ 27
S275J0	⩾ 275	⩾ 265	430~580	410~560	⩾ 15	⩾ 16	⩾ 17	⩾ 21	D=2.5a	D=3a	0	⩾ 27
S275J2	⩾ 275	⩾ 265	430~580	410~560	⩾ 15	⩾ 16	⩾ 17	⩾ 21	D=2.5a	D=3a	-20	⩾ 27
E295	⩾ 295	⩾ 285	490~660	470~610	⩾ 12	⩾ 13	⩾ 14	⩾ 18	—	—	—	—
S355JR[d]	⩾ 355	⩾ 345	510~680	470~630	⩾ 14	⩾ 15	⩾ 16	⩾ 20	D=2.5a	D=3a	+20	⩾ 27
S355J0 St52-3	⩾ 355	⩾ 345	510~680	470~630	⩾ 14	⩾ 15	⩾ 16	⩾ 20	D=2.5a	D=3a	0	⩾ 27
S355J2	⩾ 355	⩾ 345	510~680	470~630	⩾ 14	⩾ 15	⩾ 16	⩾ 20	D=2.5a	D=3a	-20	⩾ 27
S355K2	⩾ 355	⩾ 345	510~680	470~630	⩾ 14	⩾ 15	⩾ 16	⩾ 20	D=2.5a	D=3a	-20	⩾ 40

[a] 拉伸试验取横向试样。屈服现象不明显时，采用 $R_{p0.2}$。
The test pieces of the tensile test shall be taken perpendicular to the direction of rolling. $R_{p0.2}$ shall be used if the product does not exhibit any yield phenomenon.

[b] 弯曲试验取横向试样。弯曲试样宽度 b ⩾ 20mm，仲裁试验时 b=20mm。
The test pieces of the bend test shall be taken perpendicular to the direction of rolling. The width of the bend test piece b ⩾ 20mm, and b=20mm during the arbitration test.

[c] 冲击试验取纵向试样。
The test pieces of the impact test shall be taken parallel to the direction of rolling.

[d] 对 S235JR、St37-2、S275JR、St44-2 和 S355JR，仅当需方提出要求并在合同中注明时，才进行冲击试验。
For grades S235JR, St37-2, S275JR, St44-2and S355JR, Unless otherwise required by the purchaser and notified in the contract, impact test is not performed.

汽车结构用热轧酸洗钢带

Hot-rolled Pickled Strip for Automotive Structure

化学成分 Chemical Composition

牌号 Steel grade	化学成分[a]（质量分数） % Chemical composition[a](Mass fraction) %					
	C	Si	Mn	P	S	Alt
SAPH310	≤ 0.10	≤ 0.30	≤ 0.80	≤ 0.025	≤ 0.020	≤ 0.010
SAPH370	≤ 0.21	≤ 0.30	≤ 1.00	≤ 0.025	≤ 0.020	≤ 0.010
SAPH400	≤ 0.21	≤ 0.30	≤ 1.40	≤ 0.025	≤ 0.020	≤ 0.010
SAPH440	≤ 0.21	≤ 0.30	≤ 1.60	≤ 0.025	≤ 0.020	≤ 0.010
SAPH540	≤ 0.15	≤ 0.50	≤ 1.80	≤ 0.025	≤ 0.020	≤ 0.010
SAPH590	≤ 0.18	≤ 0.60	≤ 2.00	≤ 0.025	≤ 0.020	≤ 0.010
SAPH780	≤ 0.20	≤ 1.00	≤ 2.10	≤ 0.025	≤ 0.020	≤ 0.010

[a] 根为改善钢的性能，根据需要可添加其他合金元素，此时 Alt 的下限不要求。
In order to improve the performance of the steel, other alloy elements may be added as needed, in this case, the lower limit of Alt is not required.

牌号 Steel grade	化学成分（质量分数） % Chemical composition (Mass fraction) %										
	C	Mn	Si	P	S	Alt[a]	Nb[a]	V[a]	Ti[a]	Mo	B
QStE340TM	≤ 0.12	≤ 1.30	≤ 0.50	≤ 0.025	≤ 0.020	≤ 0.015	≤ 0.09	≤ 0.20	≤ 0.15	—	—
QStE380TM	≤ 0.12	≤ 1.40	≤ 0.50	≤ 0.025	≤ 0.020	≤ 0.015	≤ 0.09	≤ 0.20	≤ 0.15	—	—
QStE420TM	≤ 0.12	≤ 1.50	≤ 0.50	≤ 0.025	≤ 0.020	≤ 0.015	≤ 0.09	≤ 0.20	≤ 0.15	—	—
QStE460TM	≤ 0.12	≤ 1.60	≤ 0.50	≤ 0.025	≤ 0.020	≤ 0.015	≤ 0.09	≤ 0.20	≤ 0.15	—	—
QStE500TM	≤ 0.12	≤ 1.70	≤ 0.50	≤ 0.025	≤ 0.020	≤ 0.015	≤ 0.09	≤ 0.20	≤ 0.15	—	—
QStE550TM	≤ 0.12	≤ 1.80	≤ 0.50	≤ 0.025	≤ 0.015	≤ 0.015	≤ 0.09	≤ 0.20	≤ 0.15	—	—
QStE600TM	≤ 0.12	≤ 1.90	≤ 0.50	≤ 0.025	≤ 0.015	≤ 0.015	≤ 0.09	≤ 0.20	≤ 0.22	≤ 0.50	≤ 0.005
QStE650TM	≤ 0.12	≤ 2.00	≤ 0.60	≤ 0.025	≤ 0.015	≤ 0.015	≤ 0.09	≤ 0.20	≤ 0.22	≤ 0.50	≤ 0.005
QStE700TM	≤ 0.12	≤ 2.10	≤ 0.60	≤ 0.025	≤ 0.015	≤ 0.015	≤ 0.09	≤ 0.20	≤ 0.22	≤ 0.50	≤ 0.005

[a] 钢中可添加 Nb、V、Ti 中一种或几种合金元素，此时 Alt 的下限不要求，但 Nb+V+Ti ≤ 0.22。
One or several alloy elements of Nb, V, and Ti may be added to the steel, and the total content of Nb+V+Ti ≤ 0.22.

牌号 Steel grade	化学成分（质量分数） % Chemical composition (Mass fraction) %										
	C ≤	Mn ≤	Si ≤	P ≤	S ≤	Alt[a] ≥	Nb[a] ≤	V[a] ≤	Ti[a] ≤	Mo ≤	B ≤
S315MC	0.12	1.30	0.50	0.025	0.020	0.015	0.09	0.20	0.15	—	—
S355MC	0.12	1.50	0.50	0.025	0.020	0.015	0.09	0.20	0.15	—	—
S420MC	0.12	1.60	0.50	0.025	0.015	0.015	0.09	0.20	0.15	—	—
S460MC	0.12	1.60	0.50	0.025	0.015	0.015	0.09	0.20	0.15	—	—
S500MC	0.12	1.70	0.50	0.025	0.015	0.015	0.09	0.20	0.15	—	—
S550MC	0.12	1.80	0.50	0.025	0.015	0.015	0.09	0.20	0.15	—	—
S600MC	0.12	1.90	0.50	0.025	0.015	0.015	0.09	0.20	0.22	0.50	0.005
S650MC	0.12	2.00	0.60	0.025	0.015	0.015	0.09	0.20	0.22	0.50	0.005
S700MC	0.12	2.10	0.60	0.025	0.015	0.015	0.09	0.20	0.22	0.50	0.005

[a] 钢中可添加 Nb、V、Ti 中一种或几种合金元素，此时 Alt 的下限不要求，但 Nb+V+Ti ≤ 0.22。
One of the alloy elements among Nb、V、Ti, or any combination of these alloy elements may be added. In this case, the lower limit of Alt is not required, but the total content of Nb+V+Ti ≤ 0.22.

机械性能 Mechanical Properties

牌号 Steel grade	拉伸试验[a] Tensile Test[a]										180°弯曲试验[b] D- 弯曲压头直径 a- 试样厚度 180° Bend test[b] D-Former diameter a-Specimen thickness	
	抗拉强度[d] R_m/MPa Tensile strength[d] R_m/MPa	上屈服强度[c] R_{eH}/ MPa Yield strength[c] R_{eH} MPa			断后伸长率 % Elongation after fracture %							
		公称厚度 mm Nominal thickness mm									公称厚度 mm Nominal thickness mm	
		<6.0	6.0~<8.0	⩾ 8.0	1.5~<2.0	2.0~<2.5	2.5~<3.15	3.15~<4.0	4.0~<6.3	⩾ 6.3	<2.0	⩾ 2.0
SAPH310[d]	⩾ 310	⩾ 185		⩾ 175	⩾ 33	⩾ 34	⩾ 36	⩾ 38	⩾ 40	⩾ 41	D=0a	D=2a
SAPH370	⩾ 370	⩾ 225		⩾ 215	⩾ 32	⩾ 33	⩾ 35	⩾ 36	⩾ 37	⩾ 38	D=1a	D=2a
SAPH400	⩾ 400	⩾ 255		⩾ 235	⩾ 31	⩾ 32	⩾ 34	⩾ 35	⩾ 36	⩾ 37	D=2a	D=2a
SAPH440	⩾ 440	⩾ 305	⩾ 295	⩾ 275	⩾ 29	⩾ 30	⩾ 32	⩾ 33	⩾ 34	⩾ 35	D=2a	D=3a

[a] 拉伸试验取纵向试样。拉伸试验取 L_0=50mm，b=25mm 的试样，即为 GB/T228.1-2021 中 P17 试样。
The test pieces of the tensile test shall be taken parallel to the direction of rolling. The tensile test piece takes a specimen of L_0=50mm, b=25mm, which is No.P17 specified in GB/T 228.1-2021.

[b] 弯曲试验取横向试样。弯曲试样宽度 b ⩾ 20mm，仲裁试验时 b=20mm。
The test pieces of the bend test shall be taken perpendicular to the direction of rolling. The width of the bend test piece b ⩾ 20 mm, and b=20 mm during the arbitration test.

[c] 屈服现象不明显时，采用 $R_{p0.2}$。
$R_{p0.2}$ shall be used if the product does not exhibit any yield phenomenon.

[d] 牌号 SAPH310 的上屈服强度为参考值，不作为保证条件。
The upper yield strength of the grade SAPH310 is a reference value and is not a guarantee requirement.

牌号 Steel grade	拉伸试验[a] Tensile Test[a]						180°弯曲试验[b] D- 弯曲压头直径 a- 试样厚度 180° Bend test[b] D-Former diameter a-Specimen thickness	
	上屈服强度[c] R_{eH}/MPa Yield strength[c] R_{eH} MPa	抗拉强度 R_m/MPa Tensile strength R_m/MPa	断后伸长率 % Elongation after fracture %					
			公称厚度 mm Nominal thickness mm				公称厚度 mm Nominal thickness mm	
			<2.0	2.0~<2.5	2.5~<3.25	⩾ 3.25	<3.25	⩾ 3.25
SPFH540	⩾ 355	⩾ 540	⩾ 21	⩾ 22	⩾ 23	⩾ 24	D=2a	D=3a
SPFH590	⩾ 420	⩾ 590	⩾ 19	⩾ 20	⩾ 21	⩾ 22	D=3a	D=3a
SPFH780	⩾ 675	⩾ 780	⩾ 14	⩾ 14	⩾ 14	⩾ 15	D=4a	D=4a

[a] 拉伸试验取纵向试样。拉伸试样应采用 L_0=50mm，b=25mm，即为 GB/T228-2021 中 P17 试样。
The test pieces of the tensile test shall be taken The test pieces of the tensile test shall be taken parallel to the direction of rolling. The tensile test piece takes a specimen of L_0=50mm, b=25mm, which is No.P17 specified in GB/T 228-2021.

[b] 弯曲试验取纵向试样。弯曲试样宽度 b ⩾ 20mm，仲裁试验时 b=20mm。
The test pieces of the bend test shall be taken parallel to the direction of rolling. The width of the bend test piece b ⩾ 20mm, and b=20mm during the arbitration test.

[c] 屈服现象不明显时，采用 $R_{p0.2}$。
$R_{p0.2}$ shall be used if the product does not exhibit any yield phenomenon.

机械性能 Mechanical Properties

牌号 Steel grade	拉伸试验[a] Tensile Test[a]				180°弯曲试验[b] D- 弯曲压头直径 a 试样厚度 180° Bend test[b] D-Former diameter a-Specimen thickness
	上屈服强度 R_{eH} / MPa Yield strength R_{eH} MPa	抗拉强度[d] R_m / MPa Tensile strength[d] R_m/MPa	断后伸长率 % Elongation after fracture %		
			L_0=80mm[d]，b=20mm	$L_0=5.65\sqrt{S_0}$	
			公称厚度 mm Nominal thickness mm		
			<3.0	⩾ 3.0	
QStE340TM	⩾ 340	420~540	⩾ 19	⩾ 25	D=0.5a
QStE380TM	⩾ 380	450~590	⩾ 18	⩾ 23	
QStE420TM	⩾ 420	480~620	⩾ 16	⩾ 21	
QStE460TM	⩾ 460	520~670	⩾ 14	⩾ 19	D=1a
QStE500TM	⩾ 500	550~700	⩾ 12	⩾ 17	
QStE550TM[e]	⩾ 550	600~760	⩾ 12	⩾ 16	D=1.5a
QStE600TM[e]	⩾ 600	650~820	⩾ 11	⩾ 15	
QStE650TM[e]	⩾ 650	700~880	⩾ 10	⩾ 14	D=2a
QStE700TM[e]	⩾ 700	750~950	⩾ 10	⩾ 13	

[a] 拉伸试验取纵向试样。如需方要求，经供需双方协商并在合同中注明，拉伸试验可采用横向试样替代纵向试样。
The test pieces of the tensile test shall be taken parallel to the direction of rolling. If requested by the purchaser, agreed between the manufacture and purchaser, and specified in the order, transverse specimens can be used instead of longitudinal specimens for tensile testing.

[b] 弯曲试验取横向试样。弯曲试样宽度 b ⩾ 20mm，仲裁试验时 b=20mm。
The test pieces of the bend test shall be taken perpendicular to the direction of rolling. The width of the bend test piece b ⩾ 20mm, and b=20mm during the arbitration test.

[c] 屈服现象不明显时，采用 $R_{p0.2}$。
$R_{p0.2}$ shall be used if the product does not exhibit any yield phenomenon.

[d] 如需方要求，经供需双方协商并在合同中注明，可规定屈服强度上限或加严抗拉强度上限。
If requested by the purchaser, agreed between the manufacture and purchaser, and specified in the order, the upper limit value of the yield strength may be specified or the upper limit of the tensile strength may be tightened.

[e] 当厚度 t>8.0mm 时，允许规定的屈服强度下限降低 20MPa。
When nominal thickness is more than 8.0 mm, the specified lower limit value of yield strength is allowed to be reduced by 20 MPa.

牌号 Steel grade	拉伸试验[a] Tensile Test[a]				180°弯曲试验[b] D- 弯曲压头直径 a 试样厚度 180° Bend test[b] D-Former diameter a-Specimen thickness
	上屈服强度[c,d] R_{eH} / MPa Yield strength[c,d] R_{eH} MPa	抗拉强度[d] R_m / MPa Tensile strength[d] R_m/MPa	断后伸长率 % Elongation after fracture %		
			公称厚度 mm Nominal thickness mm		
			<3	⩾ 3	
			L_0=80mm，b=20mm	$L_0=5.65\sqrt{S_0}$	
S315MC	⩾ 315	390~510	⩾ 20	⩾ 24	D=0a
S355MC	⩾ 355	430~550	⩾ 19	⩾ 23	D=0.5a
S420MC	⩾ 420	480~620	⩾ 16	⩾ 19	D=0.5a
S460MC	⩾ 460	520~670	⩾ 14	⩾ 17	D=1a
S500MC	⩾ 500	550~700	⩾ 12	⩾ 14	D=1a
S550MC	⩾ 550	600~760	⩾ 12	⩾ 14	D=1.5a
S600MC	⩾ 600	650~820	⩾ 11	⩾ 13	D=2a
S650MC	⩾ 650	700~880	⩾ 10	⩾ 12	D=2a
S700MC	⩾ 700	750~950	⩾ 10	⩾ 12	D=2a

[a] 拉伸试验取纵向试样。如需方要求，经供需双方协商并在合同中注明，拉伸试验可采用横向试样替代纵向试样。
The test pieces of the tensile test shall be taken parallel to the direction of rolling. If requested by the purchaser, agreed between the manufacture and purchaser, and specified in the order, transverse specimens can be used instead of longitudinal specimens for tensile testing.

[b] 弯曲试验取横向试样。弯曲试样宽度 b ⩾ 20mm，仲裁试验时 b=20mm。
The test pieces of the bend test shall be taken perpendicular to the direction of rolling. The width of the bend test piece b ⩾ 20mm, and b=20mm during the arbitration test.

[c] 屈服现象不明显时，采用 $R_{p0.2}$。
$R_{p0.2}$ shall be used if the product does not exhibit any yield phenomenon.

[d] 如需方要求，经供需双方协商并在合同中注明，可规定屈服强度上限或加严抗拉强度上限。
If requested by the purchaser, agreed between the manufacture and purchaser, and specified in the order, the upper limit value of the yield strength may be specified or the upper limit of the tensile strength may be tightened.

典型用途

Typical Applications

广泛用于汽车零部件的制造，如门铰链、座椅滑道、调角器、安全气囊、安全带锁扣等。

Widely used in manufacturing of automobile's components, such as door hinges, seat slide, adjuster, airbags, seat belt lock, etc.

汽车车轮用热轧酸洗钢带

Hot-rolled Pickled Strip for Automotive Wheel

化学成分

Chemical Composition

牌号 Steel grade	化学成分[a]（质量分数）% Chemical composition[a] (Mass fraction) %					
	C	Si	Mn	P	S	Alt
B330CL	≤ 0.30	≤ 0.80	≤ 0.80	≤ 0.025	≤ 0.015	
B380CL	≤ 0.30	≤ 1.50	≤ 1.50	≤ 0.025	≤ 0.015	
B420CL	≤ 0.30	≤ 1.50	≤ 1.50	≤ 0.025	≤ 0.015	
B450CL	≤ 0.30	≤ 1.50	≤ 1.50	≤ 0.025	≤ 0.015	
B500CL	≤ 0.30	≤ 1.60	≤ 1.60	≤ 0.025	≤ 0.015	≥ 0.010
B530CL	≤ 0.30	≤ 1.60	≤ 1.60	≤ 0.025	≤ 0.015	
B550CL	≤ 0.30	≤ 2.00	≤ 2.00	≤ 0.025	≤ 0.015	
B600CL	≤ 0.30	≤ 2.00	≤ 2.00	≤ 0.025	≤ 0.015	
B650CL	≤ 0.50	≤ 2.00	≤ 2.00	≤ 0.025	≤ 0.015	

[a] 为改善钢的性能，根据需要可添加其他合金元素，此时 Alt 的下限不要求。
To improve the properties of steel, other alloying elements can be added as needed, at the same time ,the lower limit of Alt is not required.

机械性能 Mechanical Properties

牌号 Steel grade	拉伸试验[a] Tensile Test[a]			180°弯曲试验[b] D- 弯曲压头直径 a 试样厚度 180° Bend test[b] D-Former diameter a-Specimen thickness
	下屈服强度[c] R_{eH} / MPa Yield strength[c] R_{eH} MPa	抗拉强度 R_m / MPa Tensile strength R_m/MPa	断后伸长率 % Elongation after fracture % $L_0=5.65\sqrt{S_0}$	
B330CL	⩾ 225	330~430	⩾ 34	D=0a
B380CL	⩾ 235	380~480	⩾ 30	D=0.5a
B420CL	⩾ 290	420~520	⩾ 28	D=0.5a
B450CL	350~510	450~570	⩾ 27	D=0.5a
B500CL	400~530	500~620	⩾ 26	D=1a
B530CL	430~560	530~650	⩾ 24	D=1a
B550CL	450~580	550~680	⩾ 23	D=1a
B600CL	500~630	600~750	⩾ 22	D=1.5a
B650CL	550~680	650~800	⩾ 20	D=1.5a

[a] 拉伸试验规定值适用于横向试样。
The test pieces of the tensile test shall be taken perpendicular to the direction of rolling.

[b] 弯曲试验规定值适用于横向试样。弯曲试样宽度 b ⩾ 20mm，仲裁试验时 b=20mm。
The test pieces of the bend test shall be taken perpendicular to the direction of rolling. The width of the bend test piece b ⩾ 20mm, and b=20mm during the arbitration test.

[c] 屈服现象不明显时，采用 $R_{p0.2}$。
$R_{p0.2}$ shall be used if the product does not exhibit any yield phenomenon.

[d] 当厚度 t>6.0mm~10.0mm 时，允许规定的最小断后伸长率降低 2%(绝对值)；当厚度 t>10.0mm 时，对于 B380CL 允许规定的最小断后伸长率降低 4%(绝对值)，对于其他牌号允许规定的最小断后伸长率降低 3%(绝对值)。
When nominal thickness is more than 6.0 mm and no more than 10.0mm, the specified minimum elongation after fracture is allowed to be reduced by 2% (absolute value). When the thickness t is more than 10.0mm, the minimum elongation after fracture is allowed to be reduced by 4% (absolute value) for grade B380CL, the minimum elongation after fracture is allowed to be reduced by 3% (absolute value) for other grades.

典型用途 Typical Applications

广泛用于汽车车轮的轮辋和轮辐。

Widely used in automotive wheel rims and discs.

汽车大梁用热轧酸洗钢带

Hot-rolled Pickled Strip for Automotive Frame

化学成分 Chemical Composition

牌号 Steel grade	化学成分[a]（质量分数）% Chemical composition[a](Mass fraction) %					
	C	Si	Mn	P	S	Alt
B320L	≤ 0.10	≤ 0.30	≤ 0.80	≤ 0.025	≤ 0.015	≥ 0.010
B420L	≤ 0.12	≤ 0.50	≤ 1.50			
B440L	≤ 0.12	≤ 0.50	≤ 1.50			
B510L	≤ 0.20	≤ 0.50	≤ 1.60			
B510DL	≤ 0.20	≤ 0.30	≤ 1.60			
B550L	≤ 0.20	≤ 0.50	≤ 1.60			

[a] 钢中可添加 Nb、V、Ti 中一种或几种合金元素，此时 Alt 的下限不要求，但 Nb+V+Ti ≤ 0.22。
One or several alloy elements of Nb, V, and Ti may be added to the steel, and the total content of Nb+V+Ti ≤ 0.22, at the same time ,the lower limit of Alt is not required.

牌号 Steel grade	化学成分（质量分数）% Chemical composition (Mass fraction) %								
	C	Mn	Si	P	S	Alt	Nb[a]	V[a]	Ti[a]
B590L	≤ 0.12	≤ 1.80	≤ 0.50	≤ 0.025	≤ 0.015	≥ 0.015	≤ 0.09	≤ 0.20	≤ 0.15
B610L(B600L)	≤ 0.12	≤ 1.80	≤ 0.50	≤ 0.025	≤ 0.015	≥ 0.015	≤ 0.09	≤ 0.20	≤ 0.15
B650L	≤ 0.12	≤ 1.90	≤ 0.50	≤ 0.025	≤ 0.015	≥ 0.015	≤ 0.09	≤ 0.20	≤ 0.22
B700L	≤ 0.12	≤ 2.00	≤ 0.60	≤ 0.025	≤ 0.015	≥ 0.015	≤ 0.09	≤ 0.20	≤ 0.22
B750L	≤ 0.12	≤ 2.10	≤ 0.60	≤ 0.025	≤ 0.015	≥ 0.015	≤ 0.09	≤ 0.20	≤ 0.22
BST700L	≤ 0.20	≤ 1.80	≤ 0.50	≤ 0.025	≤ 0.015	≥ 0.015	≤ 0.09	≤ 0.20	≤ 0.22
BST750L	≤ 0.20	≤ 2.10	≤ 0.60	≤ 0.025	≤ 0.015	≥ 0.015	≤ 0.09	≤ 0.20	≤ 0.22

[a] 钢中可添加 Nb、V、Ti 中一种或几种合金元素，此时 Alt 的下限不要求，但 Nb+V+Ti ≤ 0.22。
One or several alloy elements of Nb, V, and Ti may be added to the steel, and the total content of Nb+V+Ti ≤ 0.22.

机械性能 Mechanical Properties

牌号 Steel grade	拉伸试验[a] Tensile Test[a]				180°弯曲试验[b] D- 弯曲压头直径 a 试样厚度 180° Bend test[b] D-Former diameter a-Specimen thickness
	下屈服强度[c] R_{eH} / MPa Yield strength[c] R_{eH} MPa	抗拉强度 R_m / MPa Tensile strength R_m/MPa	屈强比 Yield ratio	断后伸长率 % Elongation after fracture % $L_0=5.65\sqrt{S_0}$	
B320L	≥ 215	320~420	—	≥ 28	D=0a
B420L	≥ 305	420~520	—	≥ 26	D=0.5a
B440L	≥ 330	440~550	—	≥ 26	D=0.5a
B510L	≥ 355	510~630	—	≥ 24	D=1a
B510DL	≥ 355	510~630	≤ 0.80	≥ 24	D=1a
B550L	≥ 400	550~670	—	≥ 23	D=1a
B590L	≥ 450	590~710	—	≥ 20	D=1a

[a] 拉伸试验取横向试样。
The test pieces of the tensile test shall be taken perpendicular to the direction of rolling.

[b] 弯曲试验取横向试样。弯曲试样宽度 b ≥ 20mm，仲裁试验时 b=20mm。
The test pieces of the bend test shall be taken perpendicular to the direction of rolling. The width of the bend test piece b ≥ 20mm, and b=20mm during the arbitration test.

[c] 屈服现象不明显时，采用 $R_{p0.2}$。
$R_{p0.2}$ shall be used if the product does not exhibit any yield phenomenon.

机械性能

Mechanical Properties

牌号 Steel grade	拉伸试验[a] Tensile Test[a]				180°弯曲试验[b] D- 弯曲压头直径 a 试样厚度 180° Bend test[b] D-Former diameter a-Specimen thickness
	下屈服强度[c] R_{eH} / MPa Yield strength[c] R_{eH} MPa	抗拉强度 R_m / MPa Tensile strength R_m/MPa	断后伸长率 % Elongation after fracture %		
			L_0=80mm,b=20mm	L_0=5.65 $\sqrt{S_0}$	
			公称厚度 mm Nominal thickness mm		
			<3	⩾ 3	
B610L(B600L)	⩾ 500	610~760	⩾ 15	⩾ 18	D=1.5a
B650L	⩾ 550	650~820	⩾ 13	⩾ 16	D=1.5a
B700L[d]	⩾ 600	700~880	⩾ 12	⩾ 14	D=2a
B750L[d]	⩾ 650	750~950	⩾ 11	⩾ 13	D=2a

[a] 拉伸试验取横向试样。
Thetestpiecesofthetensiletestshallbetakenperpendiculartothedirectionofrolling.

[b] 弯曲试验取横向试样。弯曲试样宽度 b ⩾ 20mm，仲裁试验时 b=20mm。
The test pieces of the bend test shall be taken perpendicular to the direction of rolling. The width of the bend test piece b ⩾ 20mm, and b=20mm during the arbitration test.

[c] 屈服现象不明显时，采用 $R_{p0.2}$。
$R_{p0.2}$ shall be used if the product does not exhibit any yield phenomenon.

[d] 当厚度 t>8.0mm 时，允许规定的屈服强度下限降低 20MPa。
When nominal thickness is more than 8.0 mm, the specified lower limit value of yield strength is allowed to be reduced by 20 MPa.

典型用途

Typical Applications

广泛用于商用车的大梁。

Widely used as a main beam in commercial vehicles.

搪瓷用热轧酸洗钢带

Hot-rolled Pickled Strip for Enameling

化学成分 Chemical Composition

牌号 Steel grade	化学成分 [a]（质量分数） % Chemical composition[a](Mass fraction) %					
	C	Si	Mn	P	S	Alt
BTC210R	≤ 0.12	≤ 0.05	≤ 0.70	≤ 0.020	≤ 0.025	≥ 0.010
BTC245R	≤ 0.12	≤ 0.05	≤ 0.70	≤ 0.020	≤ 0.025	≥ 0.010
BTC330R(BTC340R)	≤ 0.16	≤ 0.05	≤ 0.90	≤ 0.020	≤ 0.025	≥ 0.010
BTC360R	≤ 0.16	≤ 0.05	≤ 0.90	≤ 0.020	≤ 0.025	≥ 0.010

[a] 根据需要，可加入其他合金元素。
Other alloy elements may be added if necessary.

机械性能 Mechanical Properties

牌号 Steel grade	拉伸试验 [a] Tensile Test[a]			
	下屈服强度 [b] R_{eH} / MPa Yield strength[b] R_{eH} MPa		抗拉强度 R_m / MPa Tensile strength R_m/MPa	断后伸长率 % Elongation after fracture %
BTC210R	≥ 210		≥ 300	≥ 28
BTC245R	≥ 245		≥ 340	≥ 26
BTC330R(BTC340R)	Thickness t<1.60mm	≥ 290	≥ 400	≥ 22
BTC360R	Thickness t<1.60mm	≥ 330	≥ 440	≥ 22

[a] 拉伸试验规定值适用于纵向试样。拉伸试样 L_0=50mm，b=12.5mm。
The test pieces of the tensile tests shall be taken parallel to the direction of rolling. The test piece : L_0=50mm,b= 12.5mm.

[b] 屈服现象不明显时，采用 $R_{p0.2}$。
$R_{p0.2}$ shall be used if the product does not exhibit any yield phenomenon.

典型用途 Typical Applications

宝钢酸洗搪瓷钢适合于干法和湿法搪瓷工艺，搪瓷内胆由于其在防腐方面的优越性能，成为热水器内胆的主力，主要应用于电热水器内胆和分体承压式太阳能热水器内胆。

Baosteel's enamelling steel is suitable for wet or dry application process. Due to its superior performance in anticorrosion, the enamelled inner container takes the majority of water heater inner container and is widely used in electric water heater and split pressure solar water heater door hinges, seat slide, adjuster, airbags, seat belt lock, etc.

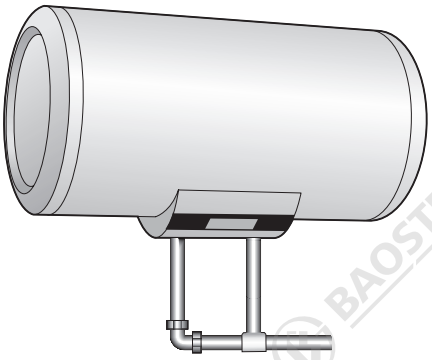

连续油管用热轧酸洗钢带

Hot-rolled Pickled Strip for Coiled Tubing

化学成分 Chemical Composition

牌号 Steel grade	化学成分[a]（质量分数）% Chemical composition[a] (Mass fraction) %										
	C ≤	Si ≤	Mn ≤	P ≤	S ≤	Alt	Cr ≤	Mo ≤	Ni ≤	Cu ≤	Nb+V+Ti ≤
CT70	0.14	0.50	1.20	0.025	0.005	0.01~ 0.07	1.00	0.50	0.30	0.50	0.15
CT80	0.14	0.50	1.20	0.020	0.005						
CT90	0.16	0.50	1.20	0.020	0.005						
CT100	0.16	0.50	1.65	0.020	0.005						
CT110	0.16	0.50	1.65	0.020	0.005						
CT130	0.16	0.50	1.90	0.020	0.005						

机械性能 Mechanical Properties

牌号 Steel grade	拉伸试验[a,b] Tensile Test[a,b]			
	屈服强度 $R_{p0.2}$ / MPa Yield strength $R_{p0.2}$/MPa	抗拉强度 R_m / MPa Tensile strength R_m/MPa	断后伸长率 A_{50mm} Elongation after fracture A_{50mm}	硬度值[b,c] Hardness[b,c]
CT70	483~552	≥ 552	≥ 17	HRB ≤ 100 或 HRC ≤ 22
CT80	551~620	≥ 607	≥ 16	HRB ≤ 100 或 HRC ≤ 22
CT90	620~689	≥ 669	≥ 14	HRB ≤ 100 或 HRC ≤ 22
CT100	≥ 689	≥ 758	≥ 13	HRC ≤ 28
CT110	≥ 758	≥ 793	≥ 12	HRC ≤ 30
CT130	≥ 896	≥ 931	≥ 10	HRC ≤ 35

[a] 拉伸试验取纵向试样。拉伸试样 L_0=50mm，b=12.5mm
Take longitudinal specimen for tensile test.Specimen L_0=50mm,b=12.5mm.

[b] 表中规定值为制成连续油管的性能要求。需方在按油管标准来选用表中的牌号时，应充分考虑制管厂制管成型工艺 焊接及热处理等因素的影响，供需双方在协商一致的原则下，以此为基础适当调整钢带的强度、延伸率及硬度要求以 保证油管成品符合相应标准的要求。
The specified values in the table are the performance requirements for producing continuous tubing. When selecting the grades in the table according to the oil pipe standards, the purchaser should fully consider the influence of factors such as the pipe forming process, welding, and heat treatment of the pipe factory. Based on the principle of mutual agreement, the manufacture and purchaser should adjust the strength, elongation, and hardness requirements appropriately to ensure that the oil pipe product meets the requirements of the corresponding standards.

[c] 硬度值为一组三个试验结果的平均值。对于 CT70、CT80 和 CT90，当用户未指定硬度类型时，按 HRB 进行试验并满 足相应规定。
The hardness value is the average of three test results in a set. For CT70, CT80, and CT90, when the user does not specify the hardness type, conduct the test according to HRB and meet the corresponding regulations.

典型用途 Typical Applications

宝钢连续油管用酸洗钢广泛应用于国内外的油井作业。

Baosteel's Coiled Tubing steel is widely used in oil well operations both domestically and internationally.

新品种
New Products

高扩孔用热轧酸洗钢带
Hot-rolled Pickled Strip for High Hole Expansion

产品特点 Product Features

宝钢高扩孔用热轧酸洗钢带是采用先进的控轧控冷技术生产的具有高的扩孔率、优良的成形性能和焊接性能。

Using advanced TMCP technology, Baosteel's hot-rolled pickled strip for high hole expansion has high expansion rate and excellent forming and welding properties.

化学成分（熔炼分析）(%)

Chemical Composition (Heat Analysis) (%)

牌号 Steel grade	化学成分[a]（质量分数）% Chemical composition[a] (Mass fraction) %							
	C ≤	Si[a] ≤	Mn ≤	P ≤	S ≤	Alt ≥	Ni+Cr+Mo ≤	其他
BR300/450HE BR600/780HE	0.18	1.20	2.00	0.050	0.010	0.015	1.50	V ≤ 0.15 Nb+Ti ≤ 0.15 Cr+Mo ≤ 1.00 B ≤ 0.010
BR780/980HE	0.18	1.60	2.20	0.050	0.010	0.015	1.50	
FB590	0.10	1.00	2.00	0.025	0.010	0.015	1.50	Nb ≤ 0.10 Ti ≤ 0.15 V ≤ 0.20
FB780	0.10	1.50	2.00	0.025	0.010	0.015	1.50	
BR660/760CP CP800	0.18	1.00	2.20	0.050	0.010	0.015~1.20	1.50	Nb+Ti ≤ 0.25 Cr+Mo ≤ 1.00 B ≤ 0.05

[a] 如需方要求时，并在合同中注明，经协商 Si 可不大于 0.20%。
If requested by the purchaser and specified in the contract, after negotiation, Si may not exceed 0.20%.

牌号 Steel grade	化学成分[a]（质量分数）% Chemical composition[a] (Mass fraction) %							
	C ≤	Si ≤	Mn ≤	P ≤	S ≤	Alt ≥	Cu ≤	B ≤
SAPH440SF	0.10	1.00	1.50	0.020	0.010	0.015	0.40	0.006
SAPH540SF	0.10	1.50	1.80	0.020	0.010	0.015	0.20	-
SAPH590SF	0.10	1.50	2.20	0.020	0.010	0.015	0.20	-
SAPH780SF	0.10	1.50	2.20	0.020	0.010	0.015	0.20	-

[a] 为改善钢的性能，根据需要可添加 Nb、V、Ti、中一种或几种合金元素。
To improve the performance of steel, one or several alloying elements such as Nb, V, and Ti can be added as needed.

机械性能

Mechanical Properties

牌号 Steel grade	拉伸试验[a] Tensile Test[a]				平均极限扩孔率 % Average ultimate hole expansion rate %
	下屈服强度[b] R_{eH} / MPa Yield strength[b] R_{eH} MPa	抗拉强度 R_m / MPa Tensile strength R_m/MPa	断后伸长率[c] % Elongation after fracture[c] %		
			L_0=80mm,b=20mm	L_0=50mm,b=25mm	
BR300/450HE	300~400	450~550	≥ 24	≥ 27	≥ 80
BR440/590HE[d] (BR440/580HE)	400~600	590~700	≥ 15	≥ 18	≥ 75
BR600/780HE	600~800	780~900	≥ 12	≥ 15	≥ 50
BR780/980HE	780~1000	980~1120	≥ 7	≥ 10	≥ 30
FB590[d]	450~620	590~720	≥ 15	≥ 18	≥ 70
FB780	≥ 680	780~900	≥ 12	≥ 15	≥ 50

[a] 拉伸试验取横向试样。
Take transverse specimen for tensile test.

[b] 屈服现象不明显时，采用 $R_{p0.2}$。经供需双方协商同意，对最小屈服强度值可不作要求。
$R_{p0.2}$ shall be used if the product does not exhibit any yield phenomenon.After consultation and agreement between the manufacture and purchaser, there is no requirement for the minimum yield strength value.

[c] 对厚度≤ 3mm，规定最小断后伸长率降低 2%（绝对值）。需方未指定试样尺寸时，采用 L_0=50mm,b=25mm
For thicknesses ≤ 3mm, it is specified that the minimum elongation after fracture should be reduced by 2% (absolute value). When the purchaser does not specify the sample size, L_0=50mm and b=25mm are used.

[d] 如需方要求拉伸试验方向改为纵向时，则最小抗拉强度降低 10MPa。
If the purchaser requests the direction of the tensile test to be changed to longitudinal, the minimum tensile strength will be reduced by 10MPa.

机械性能 Mechanical Properties

牌号 Steel grade	拉伸试验[a] Tensile Test[a]							180°弯曲试验[c] D-弯曲压头直径 a-试样厚度 180° Bend test[c] D-Former diameter a-Specimen thickness		平均极限扩孔率 % Average ultimate hole expansion rate %
	抗拉强度 R_m/MPa Tensile strength[d] R_m/MPa	下屈服强度[d] R_{eH}/MPa Yield strength[d] R_{eH} MPa	断后伸长率 % Elongation after fracture %							
		公称厚度 mm Nominal thickness mm								
		≤ 6.0	1.6~<2.0	2.0~<2.5	2.5~<3.15	3.15~<4.0	4.0~ ≤ 6.0	<2.0	≥ 2.0	≤ 6.0
SAPH440SF[a]	≥ 440	≥ 305	≥ 29	≥ 30	≥ 32	≥ 33	≥ 34	D=2a	D=3a	≥ 95
SAPH540SF[b]	≥ 540	≥ 355	≥ 21	≥ 22	≥ 23	≥ 24		D=2a	D=3a	≥ 80
SAPH590SF[b]	≥ 590	≥ 420	≥ 19	≥ 20	≥ 21	≥ 22		D=2a	D=3a	≥ 75
SAPH780SF[b]	≥ 780	≥ 680	—	≥ 14	≥ 14	≥ 15		D=2a	D=3a	≥ 50

[a] 拉伸试验取纵向试样。
Take longitudinal specimen for tensile test.

[b] 拉伸试验取横向试样。
Take transverse specimen for tensile test.

[c] 弯曲试验取横向试样。弯曲试验宽度 b ≥ 20mm，仲裁试验时 b=20mm
Take transverse specimen for bend test. The width of the bent specimen is b ≥ 20mm, and during the arbitration test, b=20mm.

[d] 屈服现象不明显时，采用 $R_{p0,2}$。
$R_{p0,2}$ shall be used if the product does not exhibit any yield phenomenon.

供货规格 Available Specifications and Sizes

牌号 Steel grade	厚度 Thickness（mm）	宽度 Width（mm）
BR330/450HE	2.0~6.0	800~1400
BR400/590HE (BR400/580HE)	2.0~6.0	800~1400
BR600/780HE	2.0~4.0	800~1300
BR7800/980HE	2.0~4.0	800~1200
FB590	2.0~6.0	800~1400
FB780	2.0~4.0	800~1300
SAPH440SF	2.0~6.0	800~1400
SAPH540SF	2.0~6.0	800~1400
SAPH590SF	2.0~6.0	800~1400
SAPH780SF	2.0~4.0	800~1300

超出上述规格范围可以协商试制。
To those requirements out of the spec range, trial production can be arranged based on further discussion and agreement.

典型用途 Typical Applications

广泛用于要求翻边变形的汽车零部件，如摆臂、车轮等。

Widely used in automotive components which require flanging deformation, such as swing arm, wheels, etc.

复相热轧酸洗汽车钢带

Multiphase Hot-rolled Pickled Strip for Automobiles

产品特点 Product Features

复相酸洗钢带是采用先进的冶炼技术和轧制技术生产的，组织由铁素体、贝氏体、马氏体和沉淀析出相等组成，具有晶粒细小、强度高和良好扩孔成形和疲劳性能。

Multiphase hot-rolled pickled strip is produced by using advanced smelting and rolling technology. Composed of ferrite, bainite, martensite and precipitation, it has fine grain size, high strength and good hole expansion forming property and fatigue performance.

化学成分（熔炼分析）(%) Chemical Composition (Heat Analysis) (%)

牌号 Steel grade	化学成分（质量分数）% Chemical composition (Mass fraction) %								
	C	Si	Mn	P	S	Alt	Cr+Mo	Nb+Ti	B
CP690	≤ 0.18	≤ 1.0	≤ 2.0	≤ 0.05	≤ 0.01	0.015-1.2	≤ 1.0	≤ 0.25	≤ 0.005
CP800	≤ 0.18	≤ 1.0	≤ 2.2						
CP1000	≤ 0.25	≤ 2.0	≤ 2.2						

机械性能 Mechanical Properties

牌号 Steel grade	屈服强度 $R_{p0.2}$ / MPa Yield strength $R_{p0.2}$/MPa	抗拉强度 R_m / MPa Tensile strength R_m/MPa	延伸率 A (%) Elongation after fracture A (%)		扩孔率 (%) Average limit hole expansion rate(%)
			L_0=80mm	L_0=50mm	
CP690	500-650	690-800	≥ 13	≥ 15	≥ 50
CP800	660-820	760-960	≥ 10	≥ 11	≥ 50
CP1000	720-920	950-1130	≥ 9	≥ 10	≥ 28

供货规格 Available Specifications and Sizes

牌号 Steel grade	厚度 Thickness（mm）	宽度 Width（mm）
CP690、CP800、CP1000	2.0~4.0	900~1400

超出上述规格范围可以协商试制。
To those requirements out of the spec range, trial production can be arranged based on further discussion and agreement.

典型用途 Typical Applications

广泛用于汽车底盘控制臂、扭力梁和抗冲击安全件。

Widely used for control arm torsion beam and impact safety items.

高扩孔纳米热轧酸洗汽车钢带

Nano Hot-rolled Pickled Auto Strip with Ultra-high Hole Expansion Ratio

产品特点 Product Features

宝钢新一代高扩孔纳米酸洗钢带采用先进的控轧控冷技术生产，具有高强度、高塑性、（超）高扩孔率、高疲劳、优异冷成形性能和高碰撞吸收能的特点。

Baosteel's new generation nano hot-rolled pickled strip with ultra-high hole expansion ratio is produced by using advanced TMCP techniques. It has outstanding properties in high strength, high plasticity, ultra-high hole expansion ratio, high fatigue limit, excellent cold formability and high collision absorption features.

化学成分（熔炼分析）(%) Chemical Composition (Heat Analysis) (%)

牌 号 Steel grade	C	Si	Mn	Nb+Ti
B590SF	≤ 0.10	≤ 1.0	≤ 2.0	≤ 0.25
B780SF	≤ 0.10	≤ 1.5	≤ 2.0	≤ 0.25
B980FC	≤ 0.18	≤ 1.6	≤ 2.2	≤ 0.25

机械性能 Mechanical Properties

牌号 Steel grade	屈服强度 $R_{p0.2}$ / MPa Yield strength $R_{p0.2}$ /MPa	抗拉强度 R_m / MPa Tensile strength R_m/MPa	延伸率 A50 (%) Elongation after fracture A50 (%) L_0=50mm	扩孔率 (%) Average limit hole expansion rate (%)
B590SF	≥ 450	≥ 590	≥ 18	≥ 75
B780SF	≥ 680	≥ 780	≥ 15	≥ 65
B980FC	≥ 780	≥ 980	≥ 10	≥ 30

注：拉伸试验为横向试样。
Note: Transversal samples are taken for tensile test.

供货规格 Available Specifications and Sizes

牌 号 Steel grade	厚度 Thickness（mm）	宽度 Width（mm）
B590SF	2.0~5.0	800~1400
B780SF	2.0~4.0	800~1300
B980FC	2.5~4.0	800~1200

超出上述规格范围可以协商试制。
To those requirements out of the spec range, trial production can be arranged based on further discussion and agreement.

典型用途 Typical Applications

广泛用于制造形状复杂汽车构件、安全构件等，如控制臂、弹簧座、连杆、后桥等。

Widely used in manufacturing complex shaped automotive components, security components such as control arm, spring seat, connecting rod, rear axle etc.

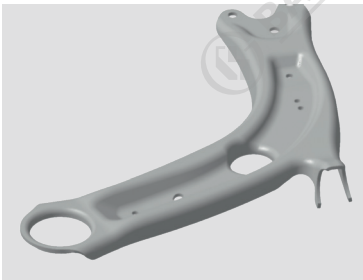

热轧酸洗双相钢带

Hot-rolled Pickled Dual Phase Strip

产品特点 Product Features

宝钢热轧双相酸洗钢带是采用先进的控轧控冷技术生产的，显微组织主要为铁素体和马氏体，具有低屈强比、高的加工硬化率、高的疲劳性能和优良冷成形性能。

Hot-rolled pickled dual phase strip is produced by using advanced TMCP techniques. Microstructure contains mainly ferrite and martensite. It has excellent properties such as low yield ratio, high work hardening rate, high fatigue property and good cold forming performance.

化学成分（熔炼分析）(%) Chemical Composition (Heat Analysis) (%)

牌 号 Steel grade	C	Si	Mn	P	S	Al
BR330/580DP	≤ 0.10	≤ 1.5	≤ 1.5	≤ 0.025	≤ 0.010	≥ 0.015
BR450/780DP	≤ 0.10	≤ 1.5	≤ 1.5	≤ 0.025	≤ 0.010	≥ 0.015

机械性能 Mechanical Properties

牌号 Steel grade	屈服强度 $R_{p0.2}$ / MPa Yield strength $R_{p0.2}$ /MPa	抗拉强度 R_m / MPa Tensile strength R_m/MPa	延伸率 A (%) Elongation after fracture A (%) L_0=80mm
BR330/580DP	330~470	≥ 580	≥ 19
BR450/780DP	450~610	≥ 780	≥ 14

注： 拉伸试验为纵向试样。
Note: Longitudinal samples are taken for tensile test.

供货规格 Available Specifications and Sizes

牌 号 Steel grade	厚度 Thickness（mm）	宽度 Width（mm）
BR330/580DP	2.0~5.0	800~1500
BR450/780DP	2.5~4.5	800~1400

超出上述规格范围可以协商试制。
To those requirements out of the spec range, trial production can be arranged based on further discussion and agreement.

典型用途 Typical Applications

广泛用于制造形状复杂汽车构件和加强件，如轿车车轮轮辐、纵梁、B 柱等。

Widely used in manufacturing automotive components and reinforcement with complex shape , such as car wheel discs, longitudinal beam, B pillar, etc.

热成形热轧酸洗汽车钢带

Hot-formed Hot-rolled Pickled Strip for Automobiles

产品特点 Product Features

宝钢热冲压用酸洗钢带是利用金属在高温（奥氏体区）状态下延展性会迅速增加，用模具进行热冲压，同时在冲模内对冲压件快速冷却（淬火），可使冲压件的强度达到 1200MPa 以上。

The stamping parts made by Baosteel's hot stamping pickled strip can reach the strength above 1200MPa by utilizing metal elongation property under high temperature (Austenite) and rapid cooling (quenching) in die.

化学成分（熔炼分析）(%) Chemical Composition (Heat Analysis) (%)

牌 号 Steel grade	C	Si	Mn	Nb+Ti
BR1200HS	≤ 0.3	≤ 2.2	≤ 2.5	≤ 0.10
BR1500HS	≤ 0.3	≤ 2.2	≤ 2.5	≤ 0.10

机械性能 Mechanical Properties

牌 号 Steel grade	状态 Status	下屈服强度 R_{pl} /MPa Yield strength R_{pl}/MPa	抗拉强度 R_m /MPa Tensile strength R_m/MPa	延伸率 A (%) Elongation after fracture (%) L_0=50mm
BR1200HS	热轧 Hot-rolled	≥ 280	≤ 700	≥ 18
	热处理后 After heat treatment	900~1200	≤ 1200	≥ 8
BR1500HS	热轧 Hot-rolled	320~630	420~800	≥ 15
	热处理后 After heat treatment	950~1250	1300~1800	≥ 6

[a] 如需方要求时，并在合同中注明，经协商 Si 可不大于 0.20%。
If requested by the purchaser and specified in the contract, after negotiation, Si may not exceed 0.20%.

供货规格 Available Specifications and Sizes

牌 号 Steel grade	厚度 Thickness（mm）	宽度 Width（mm）
BR1200HS	2.0~4.0	900~1400
BR1500HS	2.0~4.0	900~1400

超出上述规格范围可以协商试制。
To those requirements out of the spec range, trial production can be arranged based on further discussion and agreement.

典型用途 Typical Applications

广泛用于 B 柱、车门防撞杠和保险杠等。

Widely used in B pillar, side intrusion beam and bumper, etc.

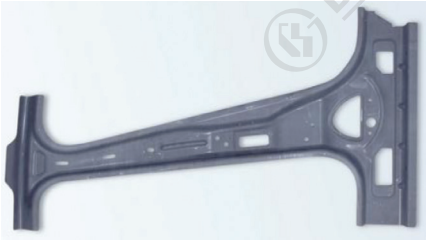

相变诱导塑性热轧酸洗汽车钢带

Transformation Induced Plasticity Hot-rolled Pickled Auto Strip

产品特点 Product Features

宝钢相变诱导塑性酸洗钢带采用先进的控轧控冷技术生产，具有高强度和高塑性、优良冷成形性能和高碰撞吸收能的特点。

Transformation induced plasticity hot-rolled pickled strip is produced by using advanced TMCP techniques. It has outstanding properties in high strength, high plasticity and excellent cold forming and high collision absorption features.

化学成分（熔炼分析）(%) Chemical Composition (Heat Analysis) (%)

牌 号 Steel grade	C	Si	Mn	Nb+Ti
BR400/590TR	≤ 0.3	≤ 2.2	≤ 2.5	≤ 0.10
BR450/690TR	≤ 0.3	≤ 2.2	≤ 2.5	≤ 0.10
BR450/780TR	≤ 0.3	≤ 2.2	≤ 2.5	≤ 0.10

机械性能 Mechanical Properties

牌 号 Steel grade	屈服强度 $R_{p0.2}$ /MPa Yield strength $R_{p0.2}$ /MPa	抗拉强度 R_m /MPa Tensile strength R_m/MPa	延伸率 A (%) Elongation after fracture (%) L_O=50mm
BR400/590TR	≥ 400	≥ 590	≥ 23
BR450/690TR	≥ 450	≥ 690	≥ 21
BR550/780TR	≥ 450	≥ 780	≥ 19

注： 拉伸试验为纵向试样。
Note: Longitudinal samples are taken for tensile test.

供货规格 Available Specifications and Sizes

牌 号 Steel grade	厚度 Thickness（mm）	宽度 Width（mm）
BR400/590TR	2.0~5.0	800~1500
BR450/690TR	2.5~4.0	800~1400
BR450/780TR	2.5~4.0	800~1400

超出上述规格范围可以协商试制。
To those requirements out of the spec range, trial production can be arranged based on further discussion and agreement.

典型用途 Typical Applications

广泛用于制造形状复杂汽车构件、安全构件等，如悬架、防撞梁、保险杆等。

Widely used in manufacturing complex shaped automotive components, security components such as suspension, side intrusion beam, bumper, etc.

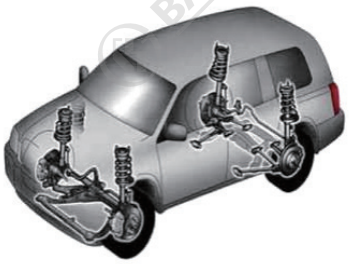

包装及标签
Packaging and Labeling

包装代码及适用范围 Packaging Code and Application Scope

江浙及上海周边用户 Jiangsu, Zhejiang and around Shanghai	国内 Domestic		出口 Export
	北方市场 North market	南方市场 South market	
m0、m8、n0	m8、n0	n0	n1

m0 钢卷简易包装代码，适用于制造厂附近直接用户
Simple coil packing code, applicable to direct users around factory

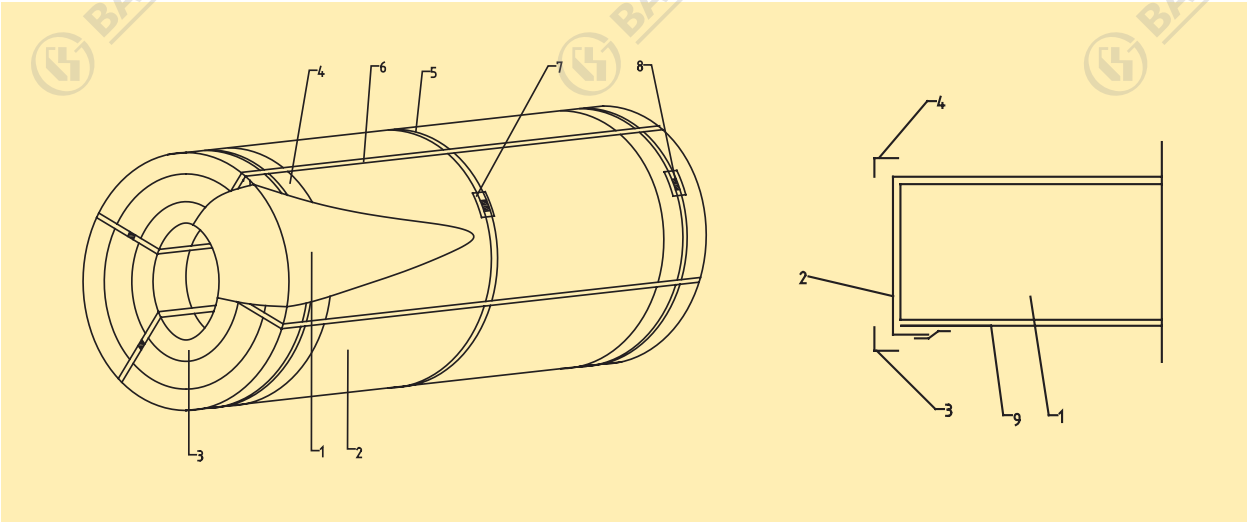

1 钢 卷；
2 外周防锈纸；
3 铁内护角；
4 纸外护角；
5 周向捆带；
6 径向捆带；
7 锁扣垫片；
8 锁扣；
9 内芯防锈纸；

1 Steel coil;
2 Peripheral rust-proof paper;
3 Iron corner guard (Inner);
4 Paper corner guard (Outer);
5 Circumferential binding strip;
6 Radial binding strip;
7 Shim for lock;
8 Lock;
9 Rust-proof paper (Innter);

m1

钢卷简易包装代码，m0+ 外周包板，适用于制造厂附近直接用户

Simple packaging code for steel coil,m0+external peripheral wrapping plate available for direct users around factroy

n0

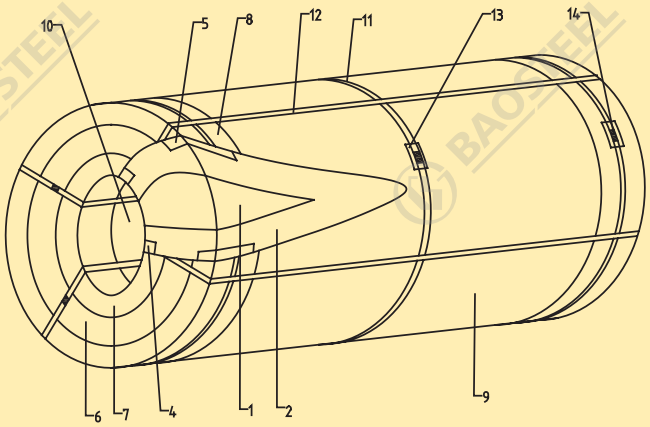

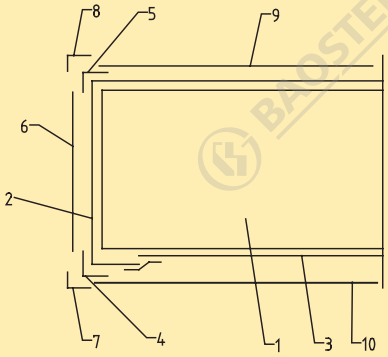

1 钢 卷；	8 铁外护角；	1 Steel coil;	8 Iron corner guard (Outer);
2 外周防锈纸；	9 外周包板；	2 Peripheral rust-proof paper;	9 External peripheral wrapping plate;
3 内芯防锈纸；	10 内周护板；	3 Rust-proof paper(Inner);	10 Inner peripheral guard plate;
4 纸内护角；	11 周向捆带；	4 Paper corner guard (Inner);	11 Circumferential binding strip;
5 纸外护角；	12 径向捆带；	5 Paper corner guard (Outer);	12 Radial binding strip;
6 铁圆护板；	13 锁扣垫片；	6 Iron round cover;	13 Shim for lock;
7 铁内护角；	14 锁扣；	7 Iron corner guard (Inner);	14 Lock.

n1

在 n0 基础上加塑料套

Plastic cover added on n0

宝山钢铁股份有限公司
http://www.baosteel.com

BAOSHAN IRON & STEEL CO., LTD.
http://www.baosteel.com

冷板销售部
CRS Sales Department
地址:上海宝山漠河路151号
邮编:201999

宝钢服务热线
Baosteel Service Hot-line
400-820-8590

宝钢慧创平台
iBaosteel
http://www.ibaosteel.com

国内贸易公司 Domestic Sales Channels

上海宝钢钢材贸易有限公司
SHANGHAI BAOSTEEL STEEL PRODUCTS TRADING CO., LTD.
TEL: 021-26640916

广州宝钢南方贸易有限公司
GUANGZHOU BAOSTEEL SOUTHERN TRADING CO., LTD.
TEL: 020-32219999

北京宝钢北方贸易有限公司
BEIJING BAOSTEEL NORTHERN TRADING CO., LTD.
TEL: 010-56512000

成都宝钢西部贸易有限公司
CHENGDU BAOSTEEL WESTERN TRADING CO., LTD.
TEL: 028-85335388

武汉宝钢华中贸易有限公司
WUHAN BAOSTEEL CENTRAL CHINA TRADING CO., LTD.
TEL: 027-84298800

沈阳宝钢东北贸易有限公司
SHENYANG BAOSTEEL NORTH-EASTERN TRADING CO., LTD.
TEL: 024-31391180

东北亚及澳洲大区 Northeast Asia and Oceania Region

宝和通商株式会社
HOWA TRADING CO., LTD.
TEL: 0081-3-32379121
FAX: 0081-3-32379123

首尔事务所
SEOUL OFFICE
TEL: 0082-2-5080893
FAX: 0082-2-5080891

BGM株式会社
BGM CO., LTD
TEL: 0082-70-44225903
FAX: 0082-31-3514558

高雄事务所
KAOHSIUNG OFFICE
TEL: 00886-7-3356606
FAX: 00886-7-3356609

宝钢澳大利亚贸易有限公司
BAO AUSTRALIA PTY LTD.
TEL: 0061-8-94810535
FAX: 0061-8-94810536

东南亚及南亚大区 South East Asia and South Asia Region

宝钢新加坡贸易有限公司
BAOSTEEL SINGAPORE PTE LTD.
TEL: 0065-63336818
FAX: 0065-63336819

宝新越南代表处
VIETNAM OFFICE
TEL: 0084-8-9100126
FAX: 0084-8-9100124

宝新泰国代表处
THAILAND OFFICE
TEL: 0066-2-6368485
FAX: 0066-2-2348989

宝新河内代表处
HANOI OFFICE
TEL: 0084-24-62694200
FAX: 0084-24-62691392

宝钢印尼钢材加工有限公司(含印尼代表处)
PT. BAOSTEEL INDONESIA STEEL SERVICE CENTER (INDONESIA OFFICE)
TEL: 0062-21-3040 8575
FAX: 0062-21-3040 8583

宝钢印度有限公司(含SANAND加工中心)
BAOSTEEL INDIA COMPANY PRIVATE LTD. (SANAND STEEL SERVICE CENTER)
TEL: 0091-22-30071700
FAX: 0091-22-30071777

宝新马来西亚代表处
MALAYSIA OFFICE
TEL: 0060-32-2016986

欧非中东大区 Europe, Africa & Middle East Region

宝钢欧洲有限公司
BAOSTEEL EUROPE GMBH
TEL: 0049-89-32709090
FAX: 0049-89-3270909130

宝钢西班牙有限公司
BAOSTEEL ESPAÑA, S.L.
TEL: 0034-93-4119325
FAX: 0034-93-4119330

宝钢中东公司
BAOSTEEL MIDDLE EAST FZE
TEL: 00971-4-8840458
FAX: 00971-4-8840485

宝欧南非代表处
SOUTH AFRICA OFFICE
TEL: 0027-11-7839985
FAX: 0027-11-7842408

宝欧土耳其代表处
TURKEY OFFICE
TEL: 0090-212-3440067
FAX: 0090-212-3440068

宝欧俄罗斯代表处
RUSSIA OFFICE
TEL: 7-499-2585602
FAX: 7-499-2585602

宝钢意大利钢材集散中心有限公司
BAOSTEEL ITALIA DISTRIBUTION CENTER SPA
TEL: 0039-010-530881
FAX: 0039-010-5308895

美洲大区 America Region

宝钢美洲有限公司
BAOSTEEL AMERICA INC.
TEL: 001-201-3073355
FAX: 001-201-3073358

宝钢巴西有限公司
BAOSTEEL DO BRAZIL LTDA.
TEL: 0055-11-26678869

宝美加拿大代表处
CANADA OFFICE
TEL: 001-905-7315888/7315885
FAX: 001-905-7315883

宝美圣地亚哥代表处
SAN DIEGO OFFICE
TEL: 001-949-7526789
FAX: 001-949-7521234

宝美墨西哥代表处
MEXICO OFFICE
TEL: 0052-55-55319506
FAX: 0052-55-55319506-201

宝美巴拿马代表处
PANAMA OFFICE
TEL: 507-382-5225

Copyright © 1985-2023 BAOSTEEL All rights reserved.

2023.12 印刷于中国上海/Printed in Shanghai China

HRP2312C

扫描二维码可直接下载本手册内容
Scan QR code to download this file